Sierra Sales
Philadelphia USA
PHONE 215-258-5602 FAX 215-258-5606

Serving the World of Industrial Tanks

GUIDELINES FOR

USE AND INSTALLATION

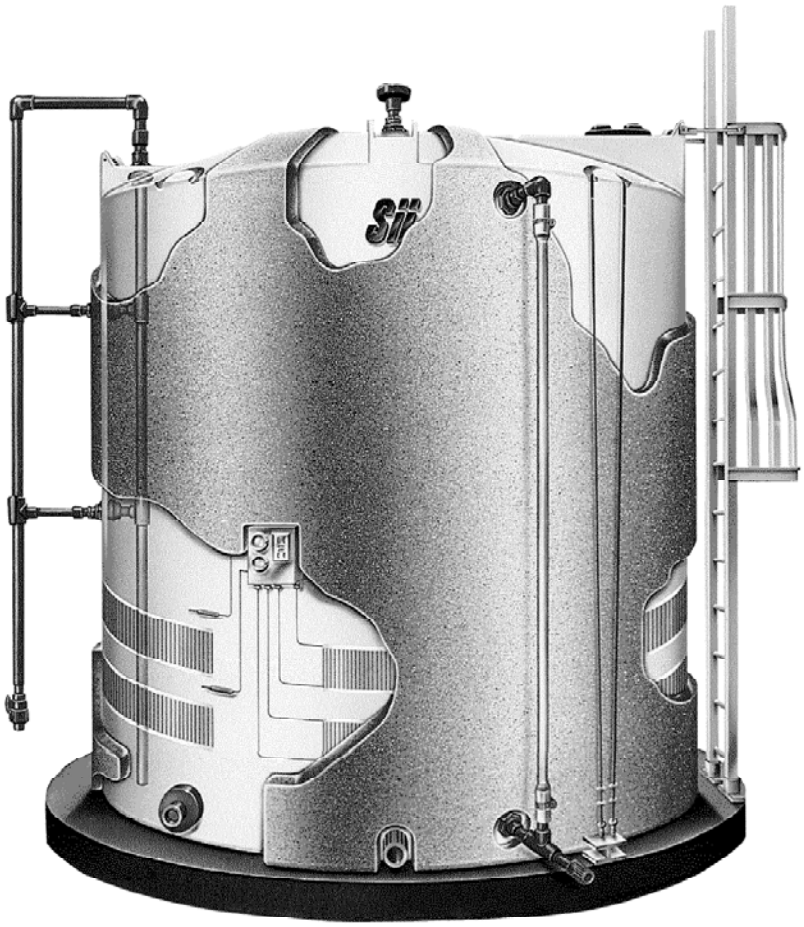

PROVIDING INDUSTRY WITH TANK SOLUTIONS

Protect your warranty – Read these instructions!

SNYDER INDUSTRIES, INC.

P.O. Box 4583 ● Lincoln, Nebraska ● 68504 ● Phone: 402-467-5221
Fax: 402-465-1220 ● www.snydernet.com

TABLE OF CONTENTS

1. SAFETY CHECKLIST
2. WARRANTY INFORMATION
3. RECEIVING AND INSPECTING YOUR TANK
4. TANK LOADING, UNLOADING, AND POSITIONING
   - 4.1 HORIZONTAL TANKS
   - 4.2 SMALL VERTICAL TANKS (LESS THAN 2000 GALLON CAPACITY)
   - 4.3 LARGE VERTICAL TANKS (GREATER THAN OR EQUAL TO 2000 GALLONS)
   - 4.4 INSULATED TANKS
   - 4.5 CAPTOR CONTAINMENT TANKS (ADDITIONAL INSTRUCTIONS)
5. PRE-INSTALLATION NOTES
   - 5.1 TANK OPERATING CRITERIA
   - 5.2 FOUNDATIONS AND SUPPORTS
   - 5.3 TANK FITTINGS AND CONNECTIONS
   - 5.4 TESTING AND FINAL INSPECTION
   - 5.5 ACCESSORY PARTS
6. FITTINGS
   - 6.1 THREADED BULKHEAD FITTING
   - 6.2 SELF-ALIGNING THREADED BULKHEAD FITTING
   - 6.3 BOLTED FLANGE FITTING
   - 6.4 BOLTED STAINLESS STEEL FITTING
   - 6.5 SNYDER UNITIZED MOLDED OUTLET - (SUMO™)
   - 6.6 SIPHON TUBE FITTINGS
   - 6.7 UNIFIED FITTING OUTLET - (UFO™)
7. TANK ATTACHMENTS
   - 7.1 U-VENTS
   - 7.2 DOWN PIPES (TANK FITTING SUPPORTED)
   - 7.3 DOWN PIPES (WELDED BOSS SUPPORTED)
   - 7.4 DOWN PIPES (WELDED PE SUPPORTED)
   - 7.5 DOWN PIPES (INDEPENDENTLY SUPPORTED)
   - 7.6 FLEXIBLE SIGHT LEVEL GAGES
   - 7.7 REVERSE LEVEL SIGHT GAGE
   - 7.8 ULTRASONIC LEVEL INDICATOR
   - 7.9 LEAK DETECTOR UNIT (FOR USE WITH CAPTOR CONTAINMENT TANKS ONLY)
   - 7.10 FLANGE ADAPTERS
   - 7.11 FLEXMASTER EXPANSION JOINTS
8. TANK ACCESSORIES
   - 8.1 LATERAL RESTRAINT SYSTEM (FLAT BOTTOM TANKS)
   - 8.2 WIND/SEISMIC TANK RESTRAINT SYSTEM (FLAT BOTTOM TANKS)
   - 8.3 WIND/SEISMIC TANK RESTRAINT SYSTEM (CONE BOTTOM TANKS)
   - 8.4 STEEL LADDERS
   - 8.5 STEEL LADDER CAGES
   - 8.6 FRP LADDERS (UP TO 300" HEIGHT)
   - 8.7 FRP LADDER CAGES
   - 8.8 HORIZONTAL LEG TANK INSTALLATION
   - 8.9 CONE BOTTOM TANK STAND EXTENSIONS
   - 8.10 HEATED TANKS
9. TANK MAINTENANCE
   - 9.1 TANK INSPECTION
10. SII PRODUCT POLICY STATEMENTS
    - 10.1 SII STANDARD LIMITED WARRANTY
    - 10.2 SII WARRANTY EXCEPTIONS
    - 10.3 RETURN MERCHANDISE/WARRANTY CLAIM PROCEDURE

1. SAFETY CHECKLIST

1.1 Confirm that the product to be stored is compatible with the tank and fittings.

1.2 Do not rigidly pipe tanks. Refer to section 5.3.2 for additional information.

1.3 All tanks must be properly vented. These tanks are not pressure vessels and must be vented to atmosphere. Venting equipment should be sized to limit pressure or vacuum in the tank to a maximum of ½" of water. Review the chemical to see if it can be vented to atmosphere or if it needs treatment prior to venting. Your application may need a sealed tank with a vent line going to a scrubber system for proper chemical safety.

1.4 **WARNING:** It is the installer's responsibility to follow all appropriate NFPA, OSHA, and governmental safety precautions. The following information has been provided as guidelines for tank use and installation. It does not address safety issues which may be present at specific tank installation sites. Use appropriate safety practices when handling any tank and/or using heavy equipment.

1.5 Prevent excessive heat near or inside the tank. Standard polyethylene tanks are designed for a maximum continuous temperature of 100°F. Consult factory for applications above 100°F.

1.6 Consider tank entry as a confined space entry. Follow proper entry procedures.

1.7 Do not stand or work on top of a tank. Remember – Safety First!

1.8 Read all warning labels on the tank prior to use and installation.

1.9 Record all warranty information as per section 2 while all information is available at time of tank receipt. Please refer to section 10 for warranty and policy statements.

2. WARRANTY INFORMATION

2.1 Record all required warranty information detailed below. Fax or mail this information to Snyder Industries at the number or address shown above. Retain a copy of this information for use in the advent of a warranty question.

2.1.1 Tank Part Number:_____

2.1.2 Tank Serial Number:_____

2.1.3 Tank Description/Size:_____

2.1.4 Date of Original Factory Invoice:_____

2.1.5 Snyder Customer Order Number:_____

2.1.6 Distributor Supplying Tank (name, address, and phone number):_____

2.1.7 Date of Water Pre-Test:_____

2.1.8 Water Pre-Test Observations:_____

2.1.9 Type of Chemical Stored:_____

2.1.10 Concentration of Chemical:_____

2.1.11 Tank Use Temperature:_____

3. RECEIVING AND INSPECTING YOUR TANK

3.1 Upon arrival at the destination, the purchaser and/or his agent shall be responsible for inspection for damage in transit. If damage has occurred or parts are missing, the purchaser should document this on the bill of lading, file a claim with the carrier, and notify the manufacturer prior to putting the tank into service.

3.2 Verify that the tank part number on the packing slip matches the tank bar code being delivered.

3.3 Do not drop a tank off a truck onto the ground. Please see section 4 for proper unloading instructions.

3.4 Please match tank components to bill of lading. Some tank components may be shipped inside the tank. Please review before putting the tank into a vertical position.

4. TANK LOADING, UNLOADING, AND POSITIONING

4.1 HORIZONTAL TANKS

4.1.1 Tanks shall be wrapped if ordered by the customer.

4.1.2 Tanks should be hand carried, moved with a handling cart, or moved with a forklift with protected or rounded fork extensions (to prevent sharp forks from damaging tanks and to provide adequate support for the tank as it is being moved).

4.1.3 Tanks should be loaded and unloaded from a horizontal position in the truck with a minimal amount of sliding. The tank shall be hand carried, moved with a handling cart, or moved with a forklift with protected or rounded fork extensions to minimize sliding.

4.1.4 Tanks should be loaded or unloaded from a dock of proper height or with a forklift with protected or rounded fork extensions. **NEVER drop a tank off of a truck onto the ground since this may damage the tank and void the warranty.**

4.2 SMALL VERTICAL and CONE BOTTOM TANKS (LESS THAN 2000 GALLON CAPACITY)

4.2.1 Tanks shall be wrapped if ordered by the customer.

4.2.2 Tanks should be hand carried, moved with a handling cart, or moved with a forklift with protected or rounded fork extensions (to prevent sharp forks from damaging tanks and to provide adequate support for the tank as it is being moved).

4.2.3 Tanks should be loaded and unloaded from a horizontal or vertical position in the truck with a minimal amount of sliding. The tank shall be hand carried, moved with a handling cart, or moved with a forklift with protected or rounded fork extensions to minimize sliding.

4.2.4 Tanks should be loaded or unloaded from a dock of proper height or with a forklift with protected or rounded fork extensions. **NEVER drop a tank off of a truck onto the ground since this may damage the tank and void the warranty.**

4.3 **LARGE VERTICAL and CONE BOTTOM TANKS (GREATER THAN OR EQUAL TO 2000 GALLONS)**

4.3.1 Tanks shall be wrapped if ordered by the customer.

4.3.2 Tanks should be moved, loaded, and unloaded in a horizontal position with a forklift with protected or rounded fork extensions, or with a crane with a spreader bar and 2 slings of appropriate size positioned on each tank as shown in Figure 4.1. NEVER drop a tank off of a truck onto the ground since this may damage the tank and void the tank warranty.

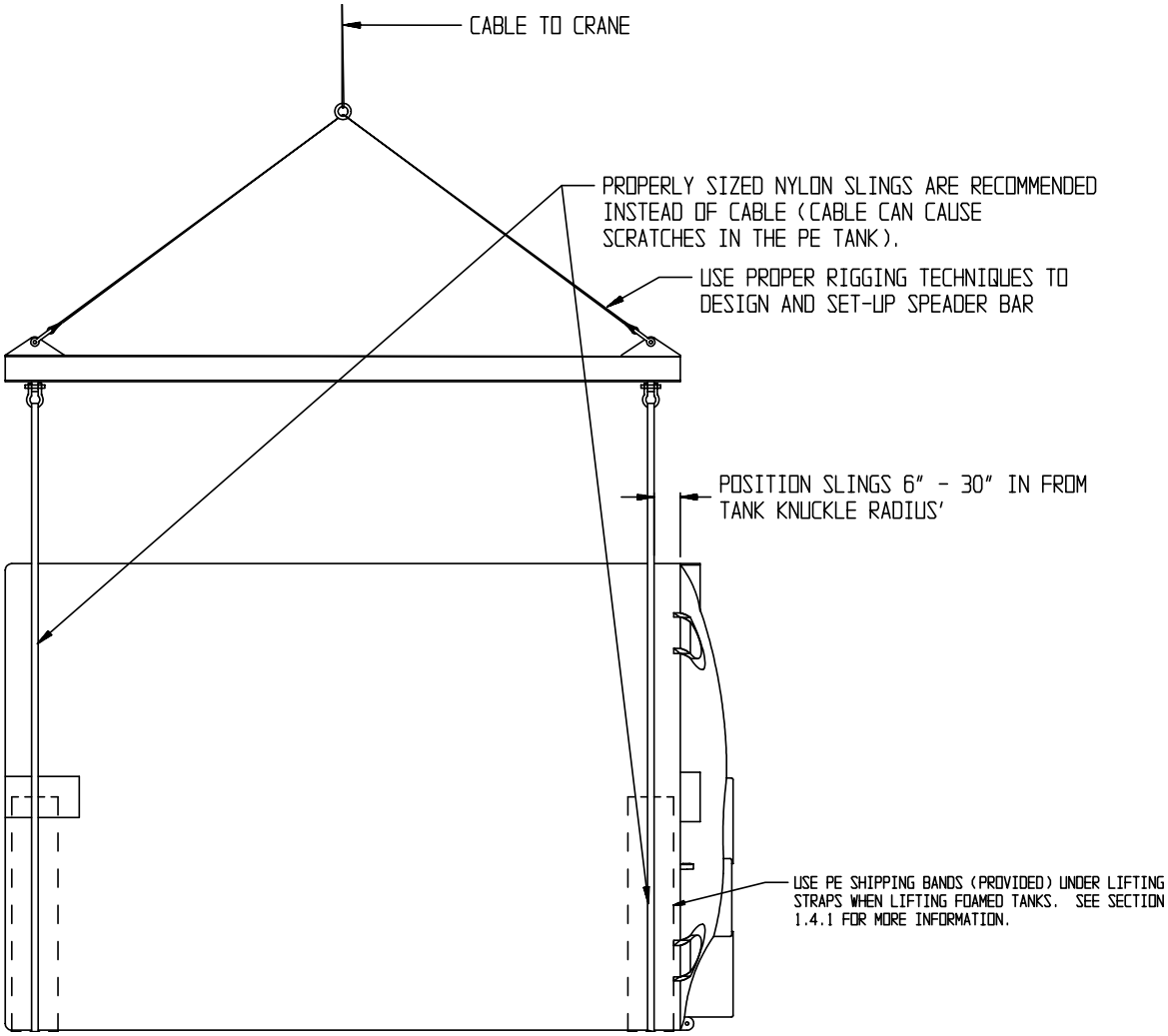

Figure 4.1

4.3.3 Tank lifting lugs are intended for moving the tank from a horizontal position to a vertical position from a firm surface. **Lifting lugs should not be used to load or unload tanks from trailers. This is a dangerous situation since the tank could roll off of the shifting trailer surface as the load is being moved.**

4.3.4 After the tank has been placed on a firm, level surface in a horizontal position, the lifting lugs may be used to erect the tank in a vertical position on an appropriate support pad. The tank should be lifted using a symmetrical arrangement of lugs to disperse the load evenly throughout the tank. To properly attach to the lifting lugs a straight clevis should be used with a minimum open throat distance of 1-1/2" and 1" diameter pins. A minimum of 4 lugs should be attached with equal length cables on all large vertical tank sizes except 142" diameter tanks. 142" diameter tanks require 3 lugs to be attached. All tanks should be positioned with 2 lugs closest to the ground prior to lifting the tank to the vertical position. Refer to Figure 4.2 for additional in-

formation. If the tank does not have lifting lugs, it may be necessary to rig the tank with slings or use a pipe and chain through the tank manway to upright the tank. Please contact the factory for additional information as necessary.

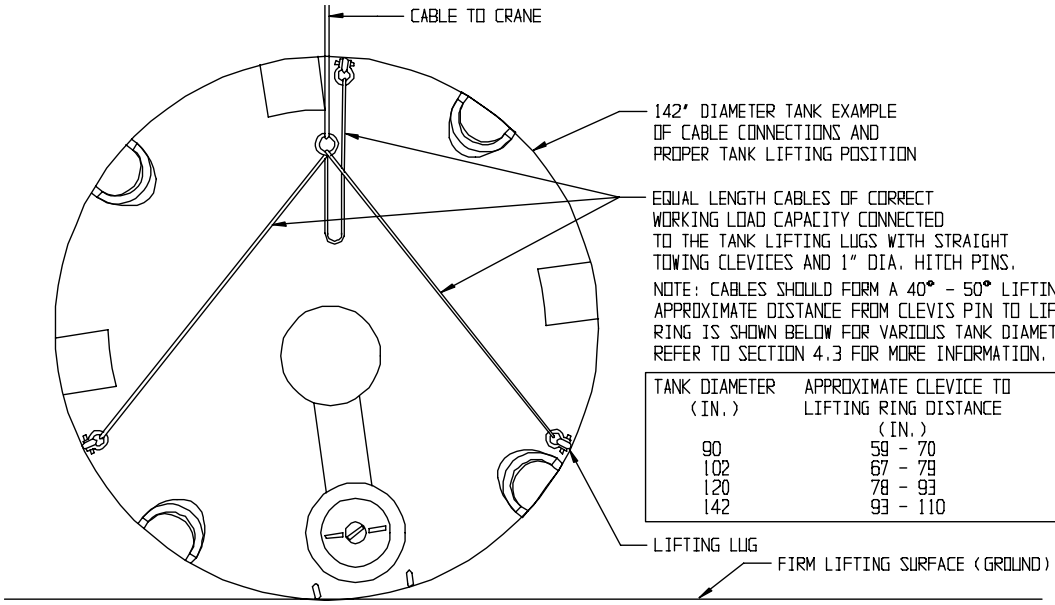

TANK DIAMETER (IN.)	APPROXIMATE CLEVICE TO LIFTING RING DISTANCE (IN.)	MINIMUM NO. OF LUGS TO BE ATTACHED TO LIFT THE TANK SAFELY
90	59 - 70	4
102	67 - 79	4
120	78 - 93	4
142	93 - 110	3

Figure 4.2

4.4 INSULATED TANKS (ADDITIONAL INSTRUCTIONS)

4.4.1 Insulated tanks must be moved with devices that have large padded contact surfaces to prevent damage to the foam insulation. **NEVER allow the tank to drop or roll on rough surfaces as this may damage the foam insulation.** When transporting foam insulated tanks, use a 30" wide PE sheet 1/4" or more thick conforming to the curvature of the insulated tank as banding supports. This will assist in decreasing the stress on the foam caused by the banding straps.

4.5 CAPTOR CONTAINMENT TANKS (ADDITIONAL INSTRUCTIONS)

4.5.1 Captor containment tanks are shipped assembled (primary tank inside of containment tank) with a shipping cable assembly holding the two tanks together. Lift and position the tank as per previous instructions. Once the tank is in position, remove the shipping cables from the tank. Do not leave the shipping cables under the tank. Follow standard vertical tank restraining methods shown in section 8.2 to restrain the tank assembly for wind or seismic conditions.

5. PRE-INSTALLATION NOTES

5.1 TANK OPERATING CRITERIA

5.1.1 TEMPERATURE - All standard SII tanks are designed for a maximum continuous service temperature of 100° F. Service temperatures greater than 100° F reduce the strength of the tank. Applications with temperatures greater than 100° F require greater wall thickness to accommodate this reduction in strength. Please consult factory for applications with service temperatures greater than 100° F.

5.1.2 PRESSURE - All standard SII tanks are designed for use at atmospheric pressure. **Pressure or vacuum situations can cause excessive deformation or damage to the tanks and void warranty.** Please consult factory for applications which may develop pressure or vacuum situations.

5.1.3 CHEMICAL COMPATIBILITY - Suitability of the tank assembly (tank, fittings, gaskets, etc.) for storing a particular chemical must be confirmed by chemical data (this should have been done by the tank distributor

or the end user prior to placing the tank order). However, changes to the tank (i.e. tank accessories, or the service of the tank) can occur. Please consult the factory with any questions.

5.1.4 LOCATION REQUIREMENTS - There may be location requirements which should be considered prior to placing the tank into service. Some items to consider are: secondary containment; locating the tank in a flood plain; locating the tank so it is easy to install and access for service; locating a tank in an area where seismic or wind forces may be experienced; and heat from surrounding equipment. **It is the responsibility of the end user to ensure that all location requirements have been taken into consideration.** Check for all federal, state, and local regulations that may apply to the tank installation. A thorough evaluation of the proposed tank location prior to tank installation is recommended.

5.1.5 TANK ENTRY PRECAUTIONS - If entry into the tank is necessary, be sure to take all necessary precautions and follow all applicable regulations. Entry into a tank should be considered a “CONFINED SPACE ENTRY” with appropriate OSHA safety precautions required. There are many safety practices which should be considered depending on the specific conditions at the site. Please follow all local, state, and Federal rules and regulations.

5.2 FOUNDATIONS AND SUPPORTS

5.2.1 Vertical flat bottom tanks should be positioned on a concrete pad providing adequate support and a method to attach a tank restraint system (see Section 8 for restraint system pad placement criteria). The pad should be clean, smooth, and level so it fully supports the entire tank bottom with no deflection. The construction site engineer must design an appropriate concrete pad based on the specific application. A sand mound support can be placed under the tank bottom to promote tank drainage and extend tank life in certain applications. This is recommended for all tanks 10,000 gallons and larger. The sand should be a construction grade utility sand or finer. The tank and pad placement must be done to prevent any erosion of the sand from under the tank. Please refer to Figure 5.1. The sand mound must be very uniform without lumps or foreign objects. Per the chart in Figure 5.1, draw a circle on the tank pad and rake the sand uniformly with zero elevation at the circle perimeter and an elevation in the center per the chart in Figure 5.1. The chart recommendations are nominal dimensions. The best support is a sand mound that follows the normally convex shape of the tank bottom. If the tank bottom is not as convex as the dimensions shown for the sand mound in Figure 5.1, then follow the tank bottom. Adjust the sand mound shape/size so the tank has minimal contact with the sand when properly centered on the mound.

5.2.2 Vertical flat bottom tanks with SUMO fittings may require a notch in the concrete support pad just in front of the SUMO fitting for piping and piping accessories. The SUMO fitting has a ±5° tolerance for fitting projection off horizontal. Since the SUMO fitting comes out from the tank very near ground level, concrete support pads which project past the SUMO fitting may interfere with the SUMO and/or its piping accessories. SII recommends that the support pad be notched to provide adequate clearance for piping and tank expansion/contraction movement. Please refer to Figure 5.2.

5.2.3 Cone bottom or horizontal tanks require specifically designed support structures. Inadequate or improperly designed support structures may cause premature tank failure. **Therefore, any support structure that is not of SII manufacture must be approved by SII in writing or ALL WARRANTIES WILL BE VOIDED.**

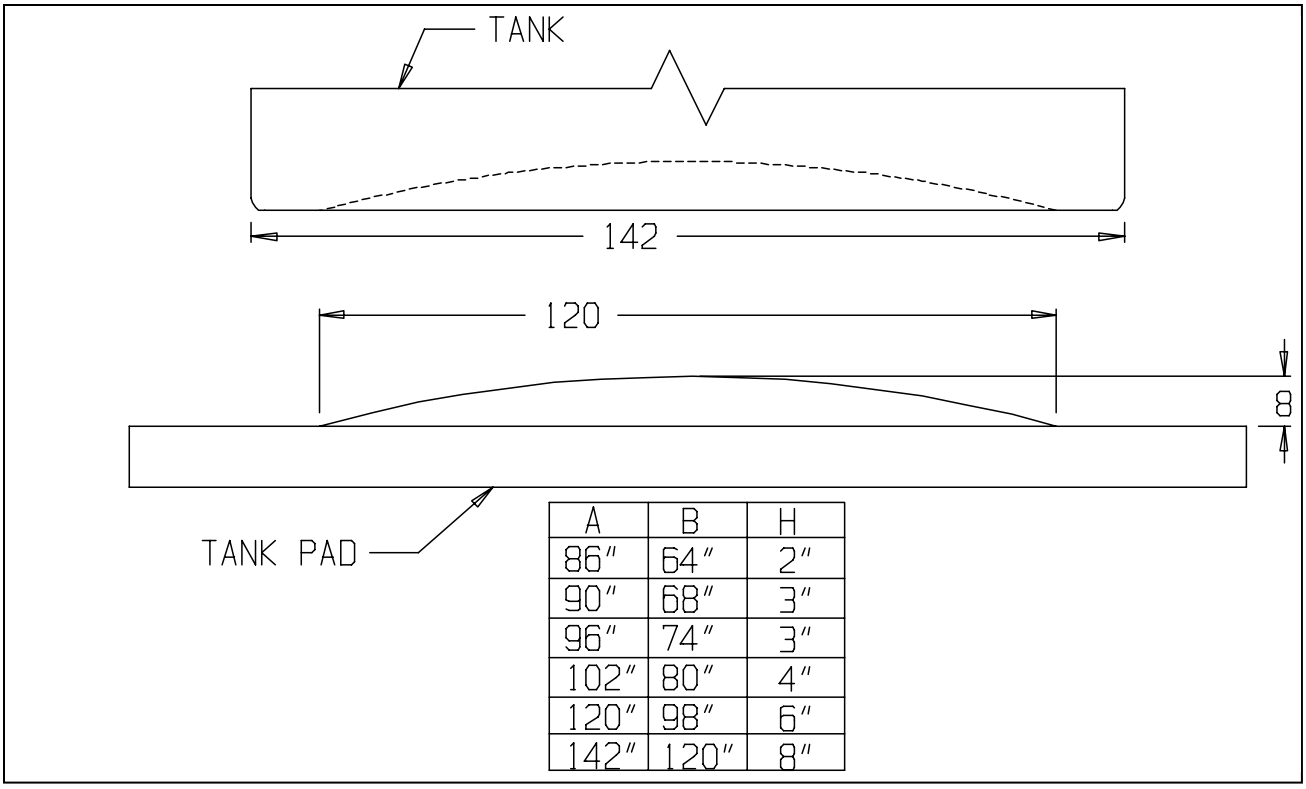

A	B	H
86″	64″	2″
90″	68″	3″
96″	74″	3″
102″	80″	4″
120″	98″	6″
142″	120″	8″

Figure 5.1

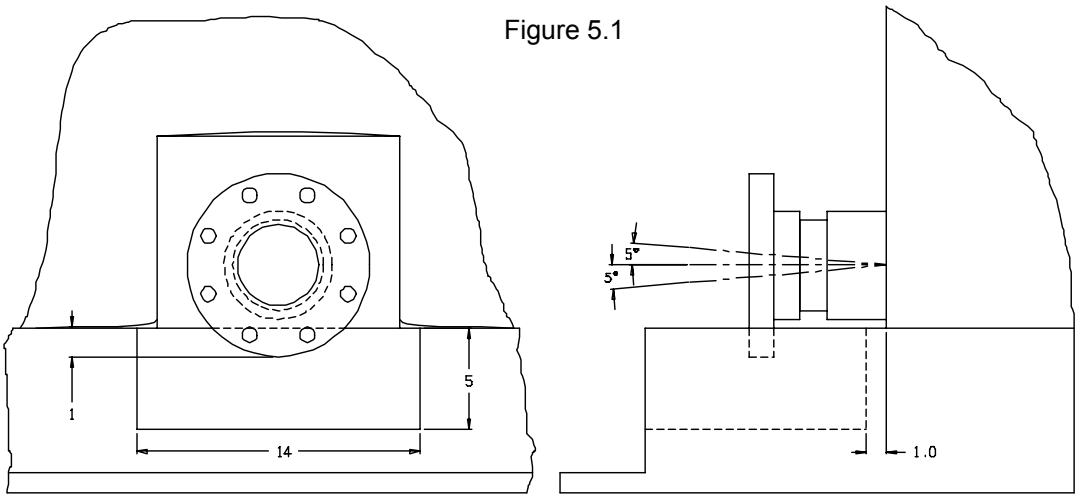

NOTES:
1. TANK MUST BE FULLY SUPPORTED BY A SOLID PAD. (CONSULT A LOCAL CIVIL OR STRUCTURAL ENGINEER).
2. ALL TANK OUTLETS MUST BE CONNECTED TO PIPING WITH FLEXIBLE CONNECTORS OR EXPANSION JOINTS CAPABLE OF 4% DIMENSIONAL MOVEMENT AS CLOSE TO TANK AS POSSIBLE (18" OR LESS). FLEXIBLE CONNECTION SHOULD BE DESIGNED FOR ±5° ANGULAR MOVEMENT DUE TO TANK EXPANSION/CONTRACTION.
3. OTHER CONNECTION METHODS ARE AVAILABLE FOR SUMP OUTLETS. (FLANGE ADAPTER SHOWN FOR EXAMPLE ONLY)
4. DIMENSIONS "B" AND "C" ARE RECOMMENDED MINIMUM DIMENSIONS ONLY (NOT REQUIRED).

SIZE	DIM. "A"	DIM. "B"	DIM. "C"
2″	1.13″	10″	5″
3″	1.13″	12″	5″
4″	1.40″	14″	5″
6″	1.35″	15″	5″

Figure 5.2

5.3 TANK FITTINGS AND CONNECTIONS

5.3.1 Most tank fittings are typically left installed in the tank. Some fittings are not installed due to damage potential or customer request. Customer job site fitting installation insures proper gasket compression and minimizes fitting damage potential. Some distributors sell or install their own tank fittings or accessories. **These fittings or accessories are not warranted by SII.**

5.3.2 All tank connections must have adequate provisions for tank expansion/contraction due to temperature and load changes. See Figure 5.3. These provisions should allow **4%** dimensional movement. Rigid piping must not be directly connected to tank outlets. SII strongly recommends using expansion joints or other provisions for all tank connections. Please see the hose connection example in Figure 5.4. SII has developed the Flexmaster expansion joint for 2" and 3" bolted tank connections. Please see section 7.11 for more details. **The use of rigid piping or the failure to provide for the expansion of the tank will void all warranties**.

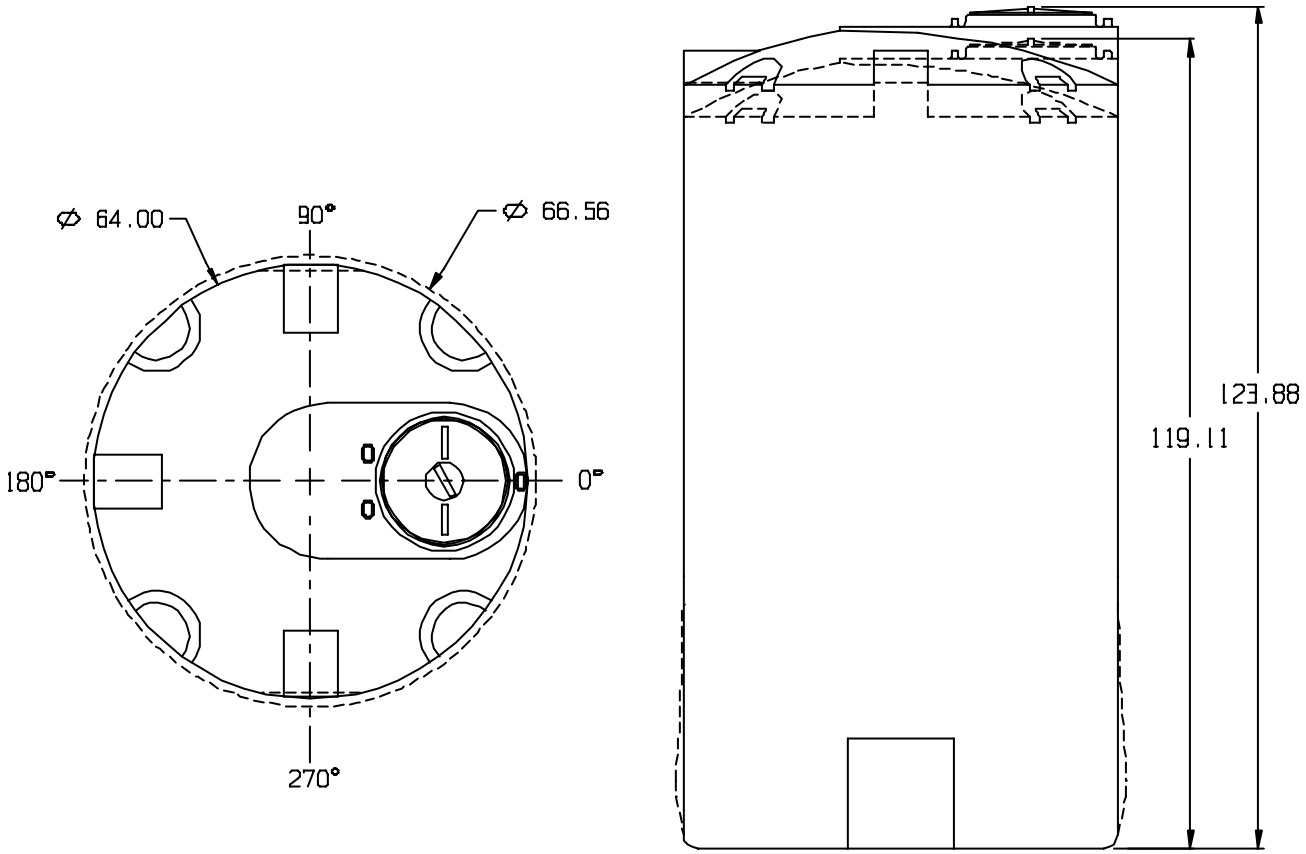

THIS EXAMPLE SHOWS 4% DIMENSIONAL CHANGE AFTER LONG TERM COLD FLOW HAS OCCURRED.
THE HIDDEN LINES SHOWN THE LONG TERM DEFLECTED CASE FOR THIS TANK AT 4% DEFLECTION.
TANK DEFLECTION IN THE SHORT TERM WILL EXHIBIT A DIFFERENT SHAPE THAN WHAT IS SHOWN.
SHORT TERM DEFLECTION IS GOING TO OCCUR MORE AT THE MID POINT OF THE TANK AND THEN SETTLE OVER A LONG TIME PERIOD TO WHAT IS SHOWN. THIS IS THE AMOUNT OF DEFLECTION THAT SHOULD BE DESIGNED INTO ANY PIPING CONNECTIONS TO THIS TANK. THE FLEXIBLE CONNECTION SYSTEM WOULD NEED TO ACCOMODATE THIS TYPE OF MOVEMENT. TYPICAL MOVEMENT UNDER NORMAL LOADING AND TEMPERATURE CONDITIONS IS USUALLY LESS THAN WHAT IS SHOWN.

Figure 5.3

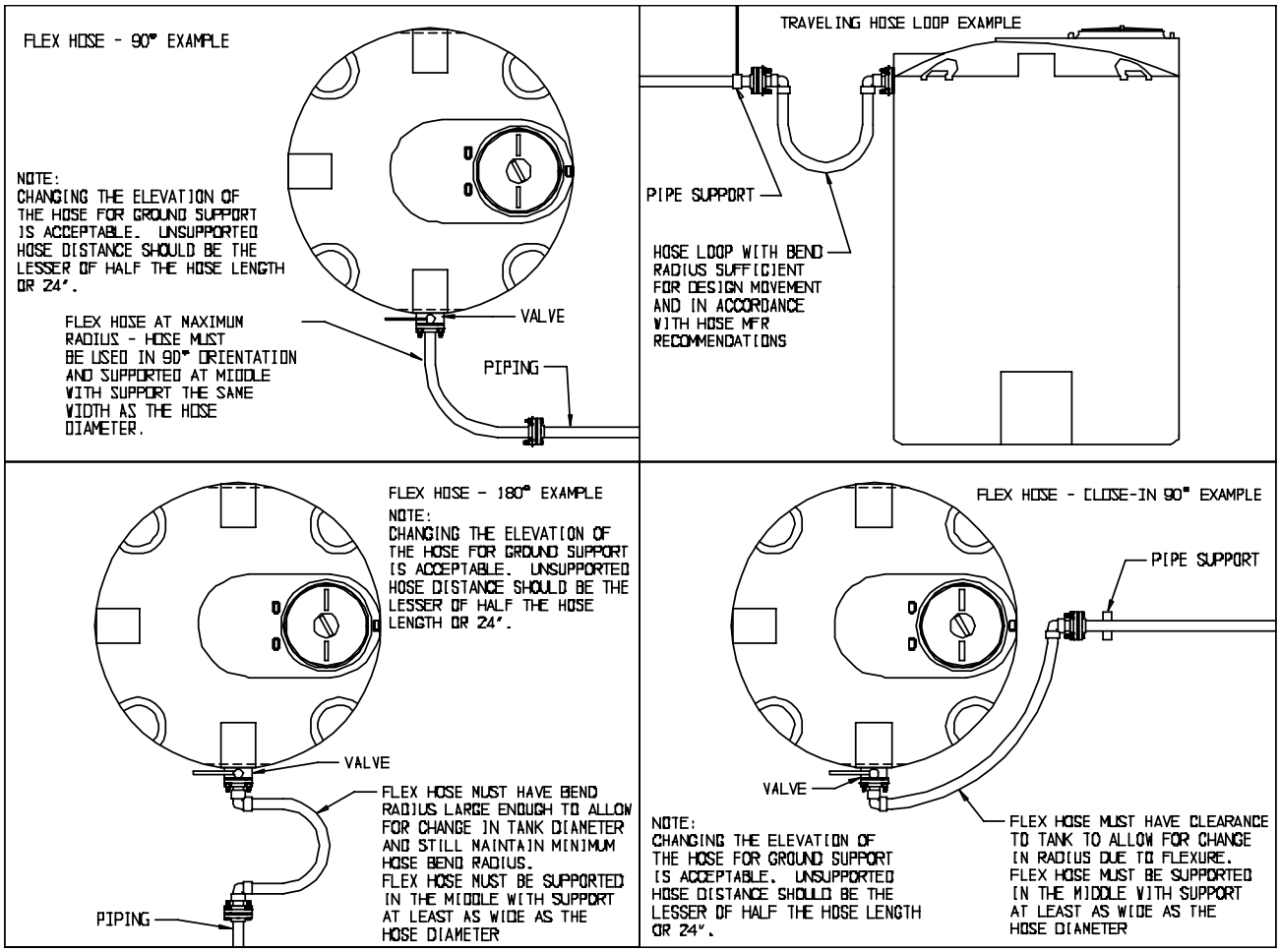

Figure 5.4

5.3.3 FITTING INSTALLATION GENERAL GUIDELINES - If fittings are to be customer drilled and installed, there are some general installation guidelines which may be helpful.

5.3.3.1 LOCATION - It is very important that fitting location be carefully considered prior to cutting any holes. **SII recommends (fitting size dependent) a 6" minimum centerline height for fittings on tanks less than 3000 gallons with the fitting gasket at least 1-1/2" above or below the end of any tank knuckle radius. SII recommends (fitting size dependent) a 9" minimum centerline height for fittings on tanks 3000 gallons or larger with the fitting gasket at least 3" above or below the end of any tank knuckle radius. SII recommends locating all fittings so gasket seal areas do not go through any tank flange lines or any molded-in tank feature (i.e. gallonage markers, logos, ribs, edges of tank flats, etc.).** SII does not recommend field cutting and installation of fittings on insulated tanks. Fittings must be located to avoid interference with tie-down devices and to allow for tightening of fittings nut(s). Mark all of the proposed fitting locations with a marker. Re-inspect all of the locations prior to cutting any holes.

5.3.3.2 TOOLS - It is very important to obtain the correct tools before attempting to install any tank fitting. Tools you will need for installing tank fittings properly include:
*Marker for laying out holes
*Tape measure, straight edge, plum-bob (to align fittings meant to be aligned), etc.
*1/2" drill motor
*Hole saw sized to the O.D. of the fitting body if bulkhead style (see section 6.1, and 6.2).
*Hole saw sized to the I.D. of the fitting flange hole or the same size as the fitting's size if flange style (see section 6.3, and 6.5).
*Drills for any bolt holes (size +1/16" larger than the size of the bolts)
*Deburring tool (a drum sander and 150 - 220 grit sandpaper may also be used)

*Wrenches (adjustable, sockets, strap wrench, etc.)

5.3.3.3 PROCEDURE

1. Disassemble the fitting and use it as a final location check as noted in 5.3.3.1.
2. With the center hole marked, cut the tank hole using the correct size hole saw (see 5.3.3.2).
3. If the fitting is a flange style (see section 6.3 and 6.5) then mark one of the bolt holes using the outer flange. The bolt holes should be oriented so the bolt holes straddle the principal centerline of the tank. With the hole correctly located and marked, drill the bolt hole.
4. Temporarily install one bolt and position the flange over the main fitting hole.
5. Mark the bolt hole opposite the bolt hole already drilled and drill that bolt hole.
6. Temporarily install another bolt and drill the remaining bolt holes using the flange as a guide.
7. With all of the fitting's holes drilled, gently deburr the hole(s) with the deburring tool. Do not put any nicks or scratches into the tank. Sand any nicks or scratches out with sandpaper greater than 120 grit.
8. Clean away any debris from the sealing surface of the tank.
9. For tanks greater than 1/2" thick, measure the tank wall thickness. If the wall thickness is not consistent within ± 1/32" around all of the fitting hole(s), some sanding on the inside of the tank wall will be necessary. This must be done carefully and as little as necessary. The purpose of the sanding is to make the wall thickness even, not to create a flat on the tank wall. The final finish sanding should be done with greater than 120 grit sand paper (preferably 220 grit).
10. With all of the fitting's hole(s) prepared, install the fitting using the instructions from the appropriate section (6.1, 6.2, 6.3, or 6.5). The inside tank wall surface must be clean and smooth at time of fitting installation.

5.4 TESTING AND FINAL INSPECTION

5.4.1 After all fittings are installed and all connections to the tank have been made, fill the tank with water and hold for at least 5 hours to identify any leaks. **A record of the water pre-test must be submitted to SII to validate the tank warranty.**

5.5 ACCESSORY PARTS

5.5.1 Various parts must be packaged separately to prevent damage during transportation. These parts are usually bagged or boxed to prevent loss or damage. Some parts may be shipped inside of the tank.

6. FITTINGS

NOTE: The following installation instructions assume the tank has been predrilled and prepared for fitting installation by the factory. Most fittings are factory installed, but check fittings for damage and gasket compression. See section 5.2 for general tank fitting information if a fitting is to be installed without a factory prepared location. Prior to installing fittings, check the sealing surface for debris and/or scratches which could cause leakage.

6.1 THREADED BULKHEAD FITTING

6.1.1 Remove the nut (C) from the fitting body (A) and gasket (B). See Figure 6.1 for part identification.

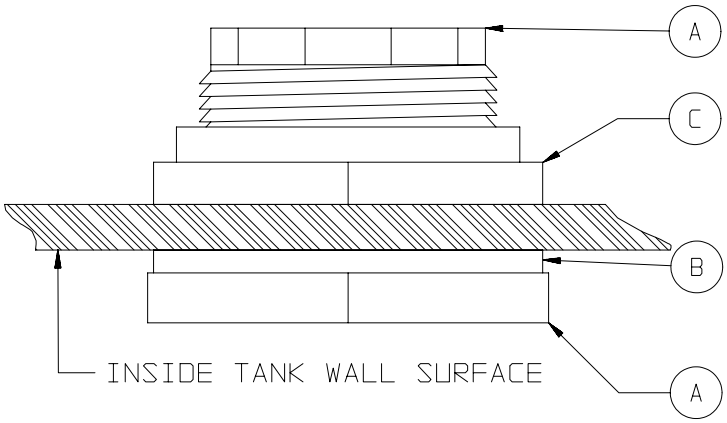

Figure 6.1

6.1.2 Working from inside the tank, slide the fitting body (A) through the hole in the tank. The gasket (B) should be between the fitting body flange and the inside tank wall. Install the nut (C) on the fitting threads protruding on the outside of the tank.

6.1.3 To obtain proper gasket compression for bulkhead fitting installation, tighten the fitting nut hand tight (check to see if it engages the tank wall). Tighten the nut an additional 3/4 turn for fittings less than 1 in., or 1/3 turn for fittings 1 in. or larger. A light lubricant, such as PAM cooking spray, is recommended to prevent thread seizing on bulkhead fittings. Inspect the gasket to make sure it is fully contacting the inner surface of the fitting body flange and the inside tank wall. Gasket compression should be between 25 - 50%. **Recheck fitting tightness periodically.**

6.2 SELF-ALIGNING THREADED BULKHEAD FITTING

6.2.1 Follow the same procedures as detailed under threaded bulkhead fitting installation steps 6.1.1 - 6.1.3.

6.2.2 Piping should be installed into the fitting ball with an appropriate thread sealant (i.e. Teflon pipe sealant). Adjust the piping to the required angle (within the limits of the fitting). When the piping has been located as required, tighten the PVC ball retainer ring located on top of the PVC ball.

6.3 BOLTED FLANGE FITTING

6.3.1 The bolted flange fitting shall be constructed with 2 ea. 150 lb. flanges (C1 and C2), 2 ea. 150 lb. flange gaskets (D1 and D2), the correct number of full threaded bolts (A), bolt gaskets (B), flat washers (E), lock washers (F), and hex nuts (G) for the flange specified. NOTE: If the tank wall thickness is greater than or equal to 0.75", the inner flange (C1) and the inner flange gasket (D1) may be omitted in certain low stress applications only. Please consult factory prior to omitting any components or the tank warranty may be voided. Refer to Figure 6.2 for part identification.

6.3.2 Disassemble the fitting as shipped by removing the bolt's hex nuts, lock washers, flat washers, outer flange, and outer flange gasket. Locate the fitting hole on the inside of the tank and insert the bolts (still installed on the inner flange and gasket) through the drilled holes in the tank. Place the outer flange gasket over the bolts on the outside surface to the tank. Place the outer flange over the outer gasket and bolts. Install the flat washers, lock washers, and hex nuts on the bolts. Check to make sure the fitting assembly appears as shown in Figure 6.2.

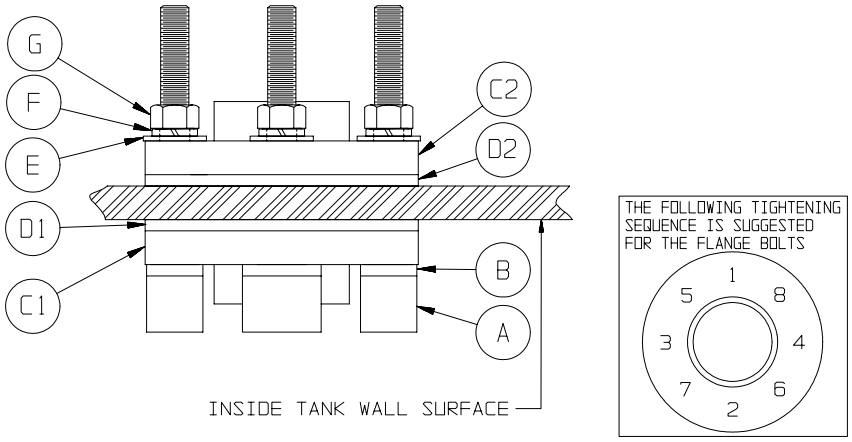

Figure 6.2

6.3.3 To obtain proper gasket compression, tighten all the fitting nuts hand tight with a deep socket using the bolt tightening sequence shown until the gaskets engage the tank wall and the lock washers are compressed. Tighten each nut an additional 3 turns (2 turns if the inner flange and gasket are not utilized) using the same sequence (do not tighten more than 1 turn at a time). A light application of lubricating oil is necessary to prevent thread seizing on S.S. bolts. Gasket compression should be between 25 - 50%. While gasket compression needs to be the controlling factor to obtain a proper seal, do not apply more torque than recommended by the flange manufacturer. See torque value listed on flange. **Recheck fitting tightness periodically.**

6.4 BOLTED STAINLESS STEEL FITTING

6.4.1 The bolted stainless steel fitting shall be constructed with 1 ea. inside flange with studs (A), 2 ea. fitting gaskets (B), 1 ea. outside flange (C), and the correct number of lock washers (D), and hex nuts (E) for the fitting specified. Refer to Figure 6.4 for part identification. .

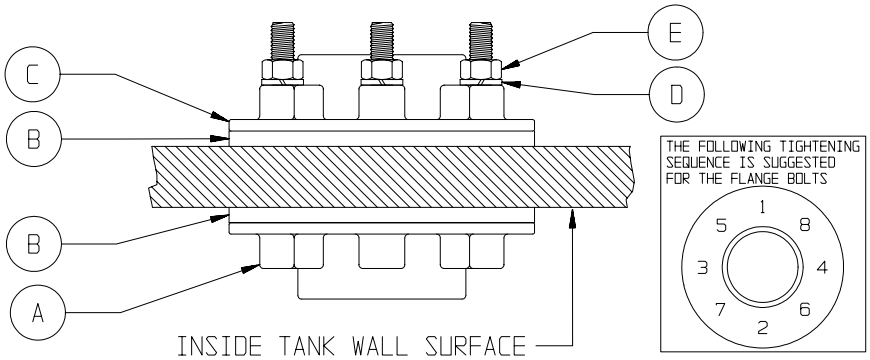

Figure 6.4

6.4.2 Disassemble the fitting as shipped by removing the hex nuts, lock washers, outside flange and outside flange gasket. Locate the fitting hole on the inside of the tank and insert the fitting's studs through the drilled holes in the tank. A gasket (B) should be between the inside fitting flange and the inside tank wall. Place the outside flange gasket and outside flange over the studs on the outside surface of the tank. Install the lock washers and hex nuts on the studs. Check to make sure the fitting assembly appears as shown in Figure 6.4.

6.4.3 To obtain proper gasket compression, tighten all the fitting nuts hand tight with a deep socket using the bolt tightening sequence shown until the gasket engages the tank wall and the lock washers are compressed. Tighten each nut an additional 1-1/4 - 2 turns using the same sequence (do not tighten more than 1

turn at a time). Do not apply more than 15 ft. - lbs. of torque. A light application of lubricating oil is necessary to prevent thread seizing on S.S. bolts. Gasket compression should be between 25 - 50%. **Recheck gasket tightness periodically.**

6.5 SNYDER UNITIZED MOLDED OUTLET - (SUMO™) (PATENT NO. 5,374,026)

6.5.1 The SUMO fitting shall be constructed with 1 ea. smaller o-ring (A), 1 ea. larger o-ring (B), and 1 ea. SUMO adapter (C). Refer to Figure 6.5 for part identification. **NOTE - The tank is shipped with a shipping stabilizer installed in the SUMO outlet. NEVER move the container without the shipping stabilizer installed.**

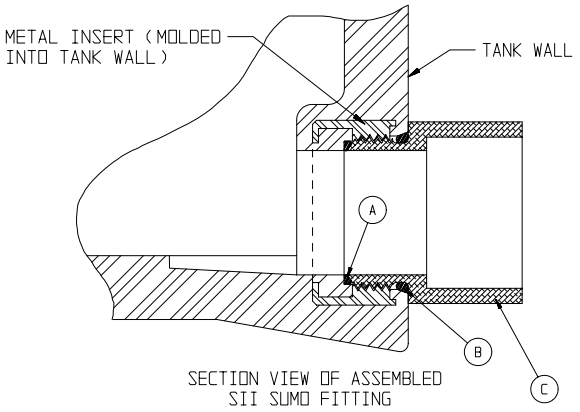

Figure 6.5

6.5.2 Once the tank has been properly placed on its foundation, remove the shipping stabilizer and clean away any dirt or debris from the SUMO outlet threads and o-ring seats. Use only a soft moist cloth. NEVER USE A TOOL THAT COULD SCRATCH THE O-RING SEATS.

6.5.3 Install the smaller o-ring inside the SUMO molded-in fitting. Make sure it is placed in the o-ring seat area evenly. Carefully stretch the larger o-ring enough to install it on the SUMO adapter. Only a SII SUMO adapter may be used. Use of a non-approved adapter will void the tank warranty. The o-ring may be lubricated with a suitable lubricant such as water. Do not use silicone or Teflon sealants. Screw the adapter in until the step on the adapter is flush with the tank wall. Do not over-torque the adapter (25 ft. - lbs. of torque maximum). Figure 6.5 shows a sectional view of an assembled SUMO fitting.

6.5.4 Once the SUMO adapter is installed, other components may be attached to the adapter. A union or flange adapter with a flexible expansion joint should be installed as close to the tank as possible to allow for future disassembly. The SUMO fitting must have adequate clearance for any piping accessories and allow for a ±5° outlet angle change. Consult factory for pad and/or accessory clearance questions. A notch in the tank support pad may be necessary (see Figure 5.2).

6.6 SIPHON TUBE FITTINGS

6.6.1 Siphon tubes may be added to the fittings specified in sections 6.1, 6.3, 6.4, and 6.5. Siphon tubes shall be customer installed with the tank in a vertical position after fitting installation.

6.6.2 PVC and CPVC siphon tubes need to be solvent welded with the proper solvent cement into the socket of a previously installed fitting. Threaded siphon tubes need to be threaded in place with Teflon pipe sealant applied to the threads prior to the fitting being installed.

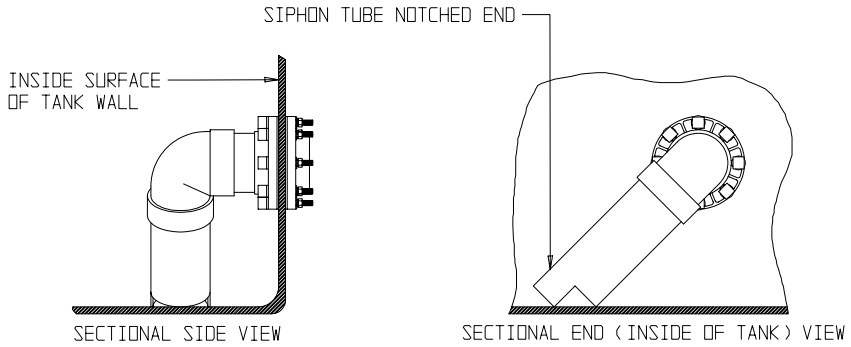

Figure 6.6

6.6.3 Siphon tubes should be located with the cut notch corner in close proximity of the floor of the tank for maximum drainage, and the siphon tube tilted to the side of the fitting. Refer to Figure 6.6 for proper placement of the siphon tube in the tank.

6.7 UNIFIED FITTING OUTLET (UFO™) - FOR USE WITH CAPTOR CONTAINMENT TANKS ONLY

3.7.1 The Unified Fitting Outlet (UFO™) is a flexible outlet device that allows primary tanks to be equipped with sidewall fittings while maintaining a seal between the primary and containment tanks that moves with tank expansion/contraction. The UFO will allow 2 to 4 in. bolted fittings to be utilized while maintaining a flexible containment seal. This option is normally a factory installed option for use with a Captor containment tank assembly only. This option can be field installed. Consult factory for more details. The bolted fittings used with this option follow the same sealing/tightening criteria as detailed in sections 6.3 and 6.4. An example of this option (patent pending) is shown in Figure 6.7.

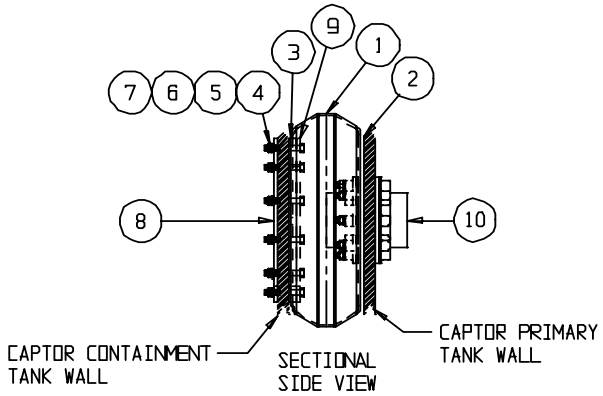

ITEM	PART DESCRIPTION	QTY
10	PROPER BOLTED FITTING ASSEMBLY	1
9	FLANGE 1PC. S.S. CAPTOR FITTING BOOT	1
8	FLANGE 2PC. S.S. CAPTOR FITTING BOOT	1
7	NUT HEX S.S.	12
6	WASHER LOCK S.S.	12
5	WASHER FLAT S.S.	24
4	BOLT S.S.	12
3	GASKET - CAPTOR BOOT 12 BOLT FLANGE	1
2	GASKET - BOLTED FITTING	1
1	FITTING BOOT - CAPTOR	1

Figure 6.7

7. TANK ATTACHMENTS

7.1 U-VENTS

7.1.1 Standard u-vents are constructed from PVC or CPVC and are provided with a loose male adapter. This allows the u-vent to be cut to the desired height. A threaded or solvent welded socket fitting can be used. U-vents can be purchased with an optional bug screen insert (CPVC holder and fiberglass 17 x 17 screen) installed.

7.1.2 When installing the u-vent in a solvent weld socket fitting, solvent weld the u-vent with the proper solvent cement in the desired position into a previously installed fitting. If the u-vent is to be used in a threaded fitting, solvent weld the male adapter provided to the u-vent and install the u-vent assembly into a previously installed threaded fitting. Refer to Figure 7.1 for an exploded illustration of this assembly.

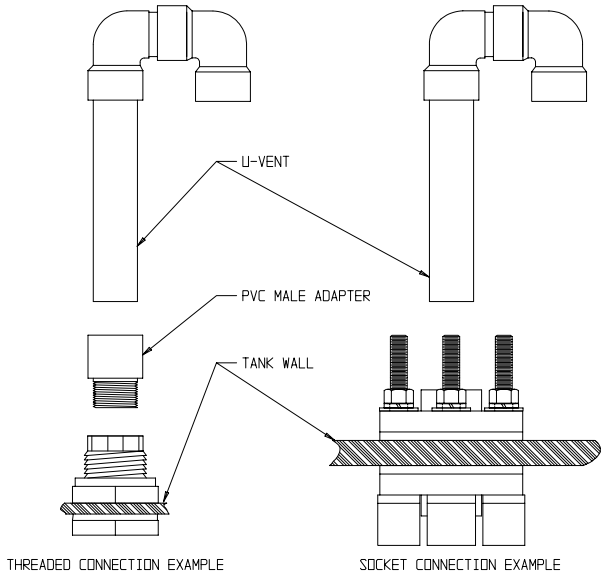

Figure 7.1

7.2 DOWN PIPES (TANK FITTING SUPPORTED) - EXTERNAL AND/OR INTERNAL

7.2.1 Down pipes are shipped loose and have been cut to size to meet customer specifications. To maintain warranty, all down pipes shall be supported at 5 ft. maximum intervals with the support structures provided.

7.2.2 Assemble the piping loosely using Figure 7.2, the guidelines detailed below, and the customer approved tank drawing to ensure all parts are present and cut to meet the customer's requirements. As soon as all parts have been checked, assemble the parts with solvent weld cement and/or threaded connections as shown in Figure 7.2.

7.2.3 Assemble and install support structures as shown in Figure 7.2 (without the saddle clamp covercaps and clips). Make sure the support clamp orientation is correct (with the small width of the wedge toward the

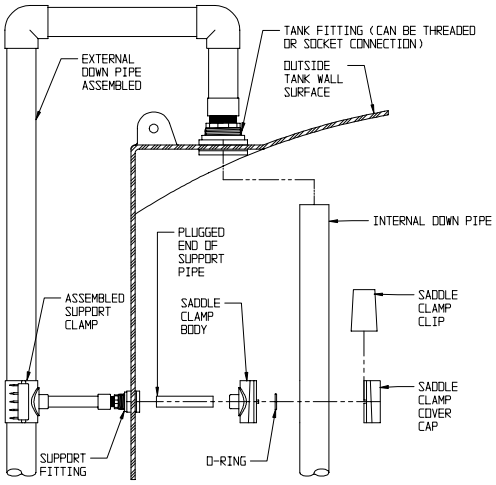

Figure 7.2

top of the tank) and that the plugged support pipes are installed with the plugged end as close to the support fitting as possible. Assemble and install piping as per the customer approved drawing. As piping is being installed on the tank, lock it in place with the saddle clamp cover caps and clips provided (make sure that the sealing o-ring is in the proper position as the pipe is positioned into the saddle support body). Seal all threaded pipe connections with Teflon pipe sealant and connect solvent weld sockets with solvent cement.

7.3 DOWN PIPES (WELDED BOSS SUPPORTED) - EXTERNAL AND/OR INTERNAL

7.3.1 Down pipes are shipped loose and have been cut to size to meet customer specifications. To maintain warranty, all down pipes shall be supported at 5 ft. maximum intervals with the support structures provided. Internal down pipes is required to have 6" minimum clearance height.

7.3.2 Assemble the piping loosely using Figure 7.3, the guidelines detailed below, and the customer approved tank drawing to ensure all parts are present and cut to meet the customer's requirements. As soon as all parts have been checked, assemble the parts with solvent weld cement and/or threaded connections as shown in Figure 7.3.

7.3.3 Assemble and install support structures as shown in Figure 7.3 (without the saddle clamp cover caps and clips). Since the support fitting does not penetrate the tank wall, the threaded connection to the support fitting does not need pipe sealant. Make sure the support clamp orientation is correct (with the small width of the wedge toward the top of the tank). Assemble and install piping as per the customer approved drawing. As piping is being installed on the tank, lock it in place with the saddle clamp cover caps and clips provided (make sure that the sealing o-ring is in the proper position as the pipe is positioned into the saddle support body). Seal all threaded pipe connections (except the support fittings) with Teflon pipe sealant and connect solvent weld sockets with solvent cement.

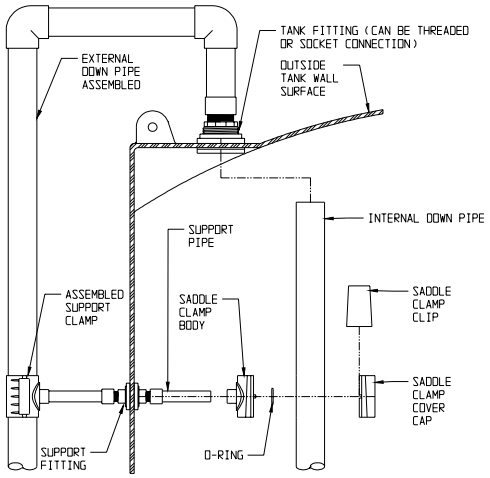

Figure 7.3

7.4 DOWN PIPES (WELDED PE SUPPORTED) - EXTERNAL AND/OR INTERNAL

7.4.1 Down pipes are shipped loose and have been cut to size to meet customer specifications. To maintain warranty, all down pipes shall be supported at 5 ft. maximum intervals with the support structures provided. Internal down pipes is required to have 6" minimum clearance height.

7.4.2 Assemble the piping loosely using Figure 7.4, the guidelines detailed below, and the customer approved tank drawing to ensure all parts are present and cut to meet the customer's requirements. The piping should be inserted into the holes in the welded support structures prior to installing the fitting in the tank. As soon as all parts have been checked, assemble the parts with solvent weld cement and/or threaded connections as shown in Figure 7.4. Seal all threaded pipe connections with Teflon pipe sealant and connect solvent weld sockets with the correct type of solvent cement.

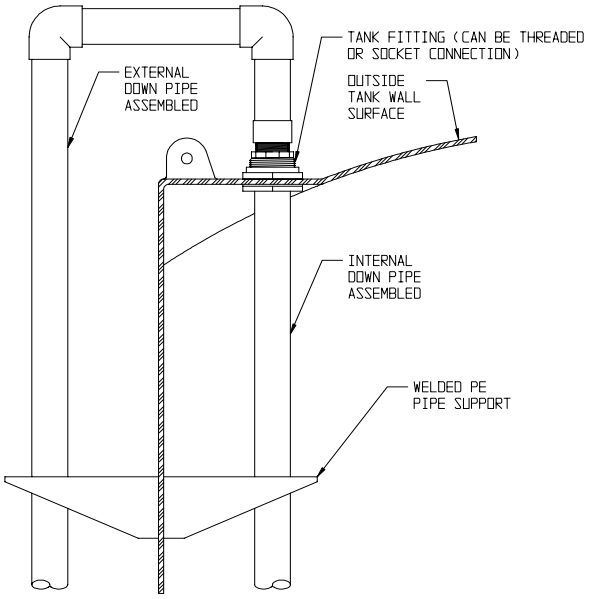

Figure 7.4

7.5 DOWN PIPE - INDEPENDENTLY SUPPORTED - (EXTERNAL ONLY)

7.5.1 Down pipes are shipped loose and have been cut to size to meet customer specifications. To maintain warranty, all down pipes shall be supported at 42 in. maximum intervals with the support clamps provided.

7.5.2 Assemble the piping loosely using Figure 7.5, the guidelines detailed below, and the customer approved tank drawing to ensure all parts are present and cut to meet the customer's requirements. Mark the strut post base on the concrete when in proper position. Install 2 ea. 3/8” adhesive anchors and bolt base into position. As soon as all parts have been checked, assemble the parts with solvent weld cement and/or threaded connections as shown in Figure 7.5.

7.5.3 Assemble and install support structures as shown in Figure 7.5. Make sure the support clamps are spaced evenly. Locate the strut catchers and twist 90° to lock in place. Install the clamps to the strut catchers with the #10 screws provided. Clamps 3 in. and larger require 2 ea. strut catchers, #10 screws and #10 washers. The pipe will click into position in the clamps. Make sure all clamps have clicked to full engagement and are tight. Assemble and install piping as per the customer approval drawing. Seal all threaded

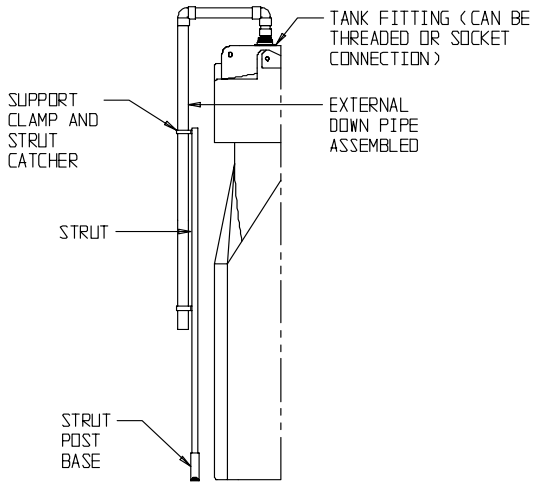

Figure 7.5

pipe connections with Teflon pipe sealant and connect solvent weld sockets with solvent cement.

7.6 FLEXIBLE SIGHT LEVEL GAGES

7.6.1 Sight level gage assemblies are shipped loose and have been cut to size to meet customer specifications. Sight gages may be ordered with either no valve, 1, 2, or 3 valves. Please refer to the customer approved drawing to determine the number of valves required.

7.6.2 Using the assembly drawings shown in Figure 7.6, verify that all parts are present and assemble the unit per the appropriate drawing. Seal all threaded pipe connections with Teflon pipe sealant. Gallonage decals may be purchased as separate items and customer applied to the tank to assist in indication of tank gallonage. NOTE - Gallonage decals are not available for all tank sizes.

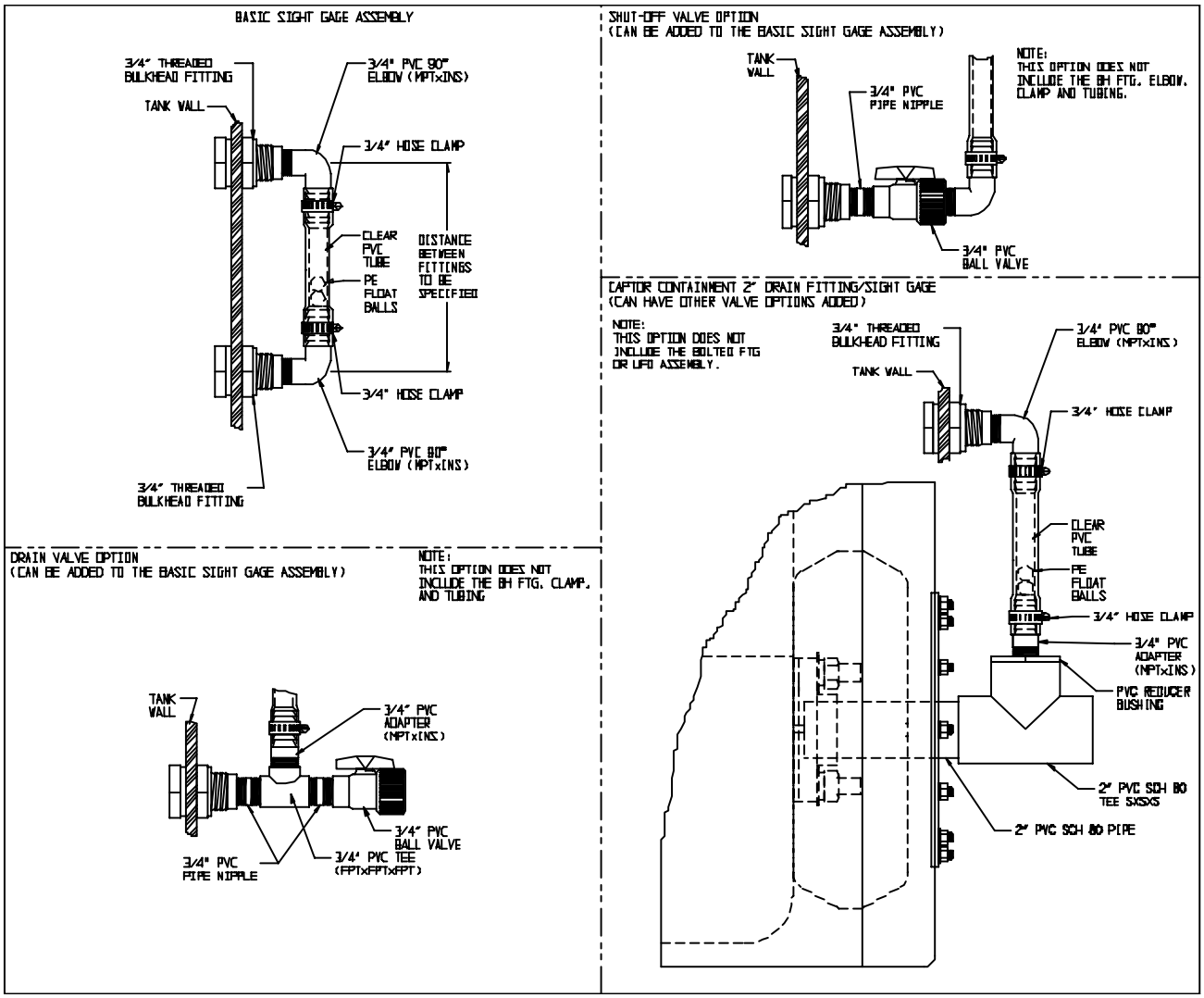

Figure 7.6

7.7 REVERSE LEVEL SIGHT GAGE

7.7.1 The component parts (except the rope) have been cut to meet SII and customer specifications. The sight gage shall be supported at 5 ft. maximum intervals to the liquid holding tank with the support structures provided.

7.7.2 Assemble the piping loosely using Figure 7.7, the guidelines detailed below, and the customer approved tank drawing to ensure all parts are present and cut to length. As soon as all parts have been checked, assemble the parts with solvent weld cement and/or threaded connections as shown in Figure 7.7. NOTE - Do not use solvent weld cement on the outside joints indicated in Figure 7.7. SII recommends periodic inspection of the rollers in the tee assemblies and the rope to ensure proper operation of the gage. If it is a requirement to seal these joints, a silicone based caulking should be sufficient.

7.7.3 Assemble and install the support structures as shown in Figure 7.7 (without the saddle clamp cover caps and clips). Make sure the support clamp orientation is correct (with the small width of the wedge toward the top of the tank) and that the plugged support pipes are installed with the plugged end as close to the support fitting as possible. Make sure that the indicator board has been installed over the outer pipe supports as shown in Figure 7.7. Assemble and install piping as per the customer approved drawing. As piping is being installed on the tank, lock it in place with the saddle clamp cover caps and clips provided (make sure that the sealing o-ring is in the proper position as the pipe is positioned into the saddle support body). Seal all

threaded pipe connections with Teflon pipe sealant and connect solvent weld sockets with the correct solvent cement (except the joints as noted in Figure 7.7).

7.7.4 With the inner and outer tank pipes in place, connect the rope provided to the tank float (This is accomplished by threading the rope through the center hole in the float and out one of the side holes, double knotting the rope, cutting off any excess material and pulling the rope back so the knot holds under the center hole.) and lower it into the inner pipe as shown. Thread the rope through the tee assemblies and the connecting pipe as shown. At this point the float should be at the bottom of the tank, the tee assemblies and connecting pipe should be assembled and sitting off at an angle from the outer clear 2" PVC pipe. With the rope threaded through the outer tee assembly, attach the rope to the indicator in a position parallel with the zero mark on the indicator board. (This is accomplished by threading the rope through the center hole in the indicator, double knotting the rope, checking the indicator position, adjusting as necessary and cutting any excess material protruding from the bottom of the indicator.) Put the indicator into the outer clear 2" PVC pipe while swinging the tee assemblies and connecting pipe into position. With all piping and tee assemblies installed, install the 3" PVC pipe plugs. During the tank hydrotest and first operations of the tank, check the gage for proper level indication and adjust as necessary. NOTE - This is a gallonage indicator and is not intended as an accurate measuring device.

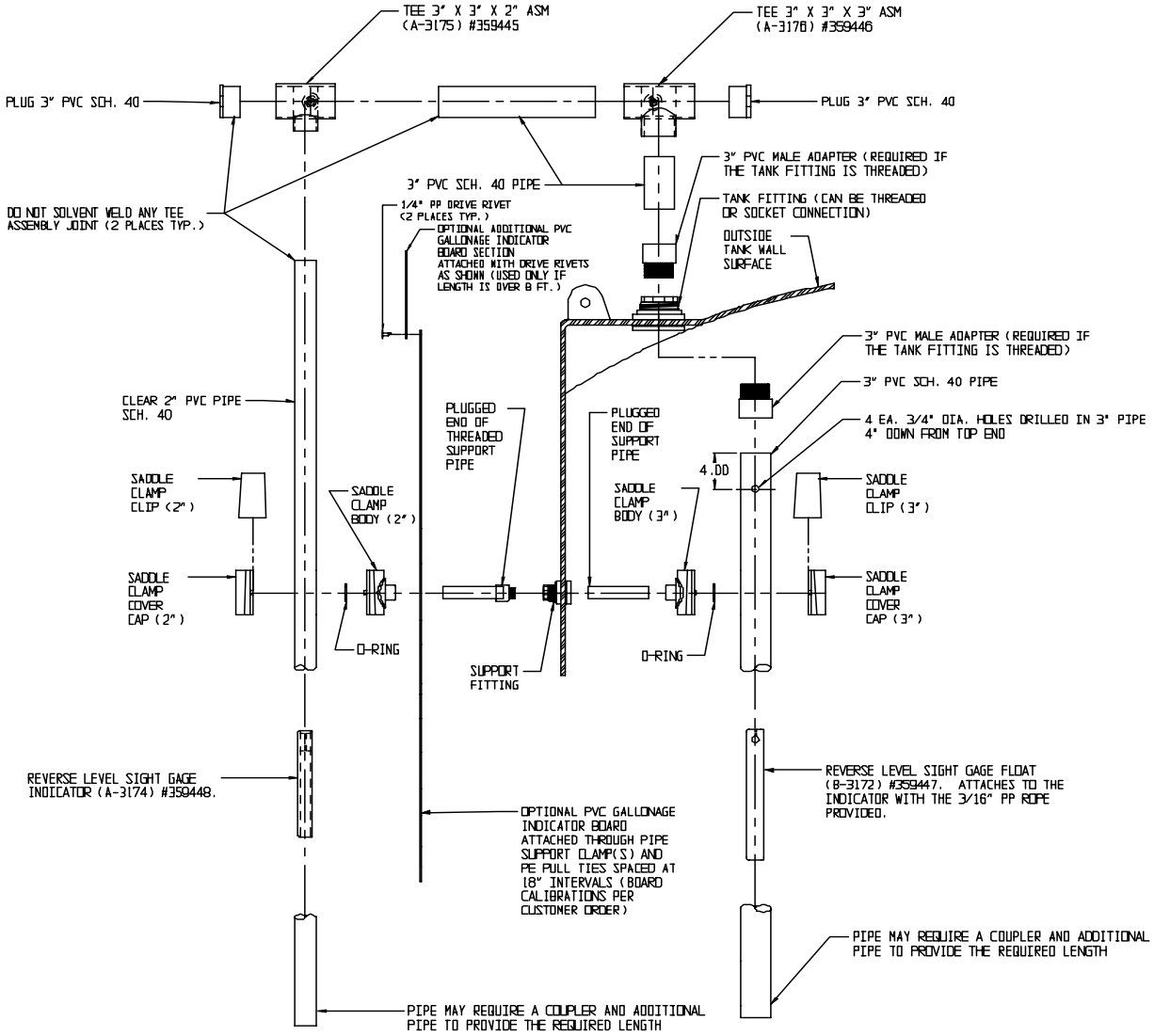

Figure 7.7

7.8 ULTRASONIC LEVEL INDICATOR

7.8.1 Install the PE bulkhead fitting per section 6.1 for sensors with male pipe threads. Install the sensor into the fitting with Teflon® pipe sealant. Remove the display unit box cover. Attach the display unit to the PE mounting plates provided on the tank with 4 ea. #10 S.S. Self-tapping screws. Attach the sensor cable to the control box with small strain relief and connect wires per label in the box. Please see Figure 7.8 below for sensor wire attachment information. Attach the unit to 110 VAC and test unit. The display unit is preprogrammed for the tank ordered. The display with show hundreds of gallons (display x 100 = gallons). Refer to literature shipped with unit to answer any additional questions.

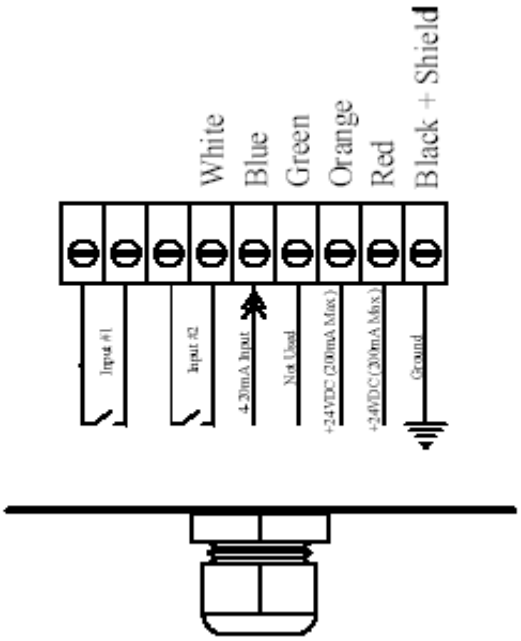

Figure 7.8

7.9 LEAK DETECTOR UNIT (FOR USE WITH CAPTOR CONTAINMENT TANKS ONLY)

7.9.1 The leak detector unit consists of a proximity sensor, 2 in. FPT fitting connection, 2 in. bung plug, ¾ in. strain relief, and an indicator box. Install the ¾ in. strain relief into the 2 in. bung plug. Loosely install the proximity sensor cord into the strain relief with the sensor face to the inside of the plug assembly. Place the sensor in the interstitial space between the primary and secondary tanks approximately 1 in. above the tank bottom and securely tighten the strain relief to hold the sensor and sensor cord into position. Remove the indicator box cover. Attach the indicator box to the PE mounting plates provided on the tank with the 2 ea. #10 S.S. self-tapping screws. Attach the sensor cable to the control box with small strain relief and connect wires per label in the box. Please see Figure 7.9. Connect unit to 110 VAC per label in the box using strain relief provided or other acceptable methods and test the unit. The indicator box will show a green light when power is on and the sensor is not detecting a liquid. The light is a push to test light allowing the operator to test for power outage or malfunction. If the green light goes out there are two possibilities. If the green light does not come on when the button is pushed, this would indicate a lack of power to the unit or the light bulb is burned out. If the green light comes on when pushed, then a possible leak condition is indicated.

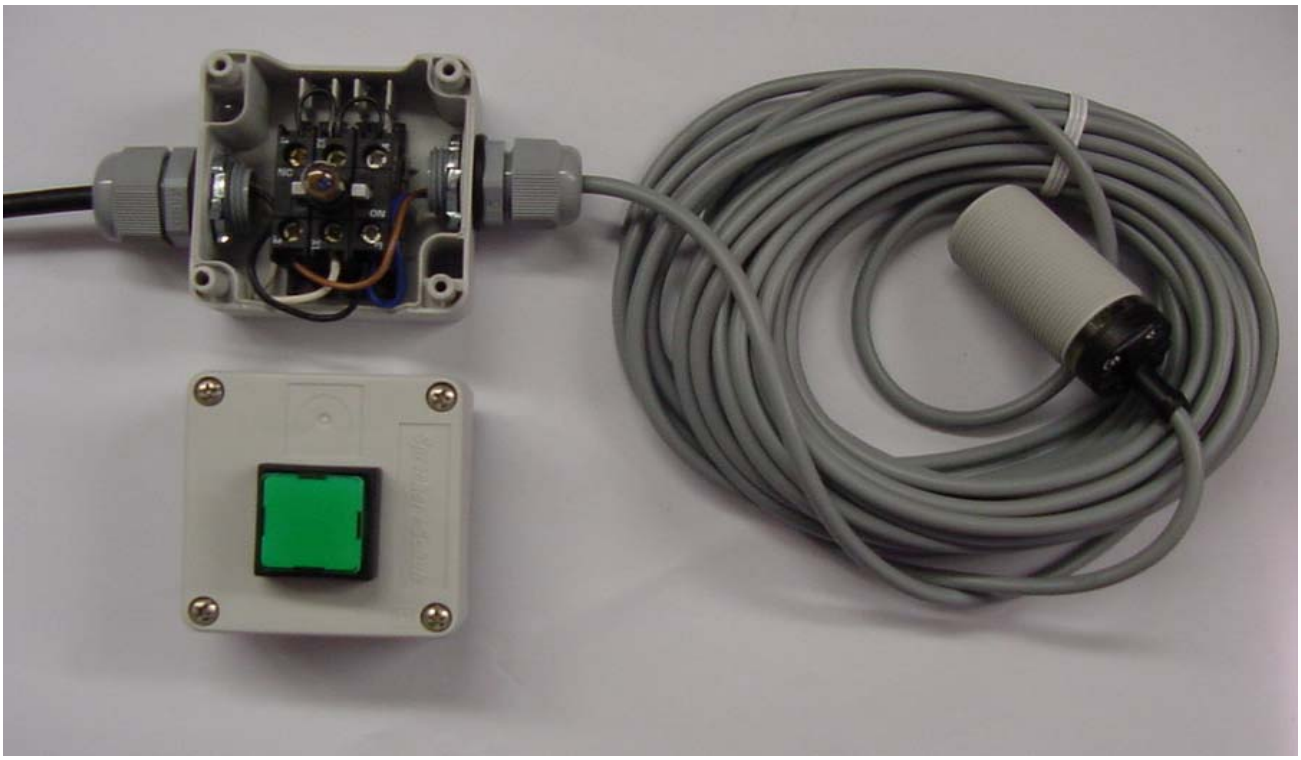

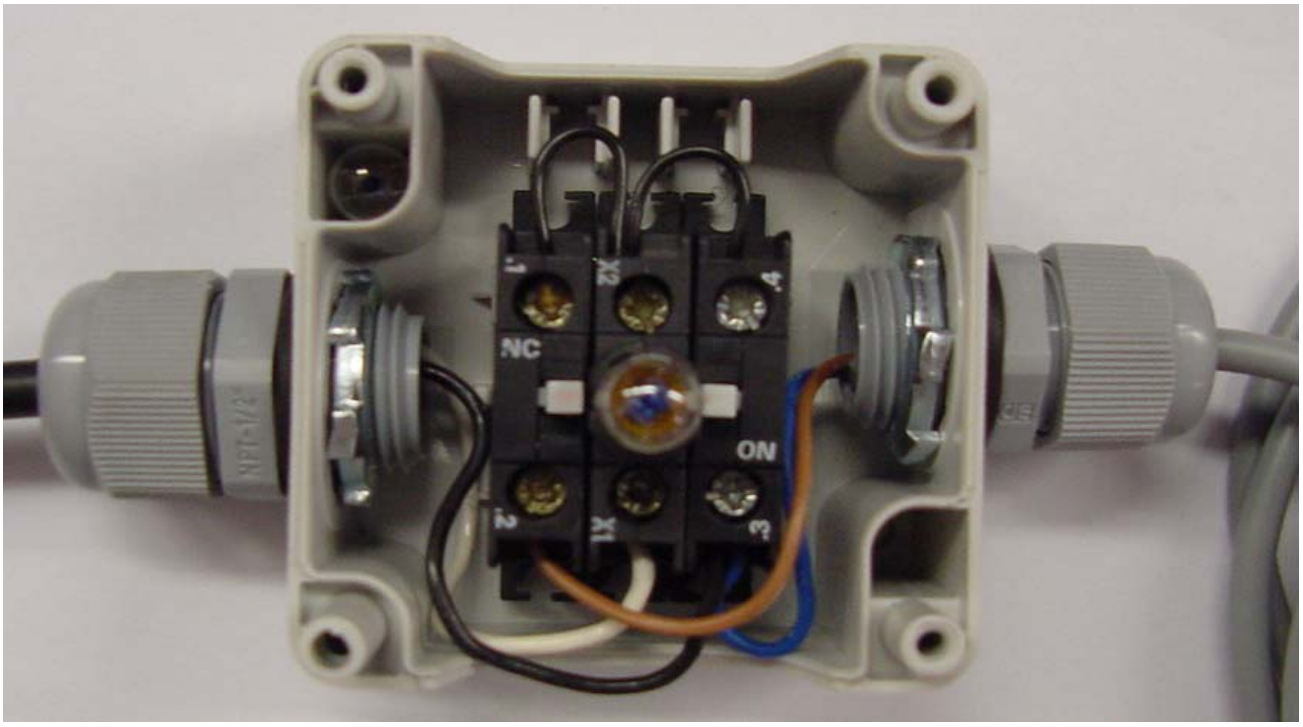

Figure 7.9

7.10 FLANGE ADAPTERS

7.10.1 Standard flange adapters are constructed from PVC or CPVC and may be purchased for solvent weld socket fittings or threaded fittings. Flange adapters for threaded fittings are provided with loose male adapter to allow the customer to adjust adapter length and flange position to match the piping at the installation. Refer to Figure 7.10 for an illustration of a flange adapter.

7.10.2 When installing the flange adapter in a solvent weld socket fitting, cut the flange adapter pipe to desired length (factory supplied 12" length) and solvent weld the flange adapter with the proper solvent cement in the desired position in a previously installed fitting. If the flange adapter is to be used in a threaded fitting, install the male adapter into the fitting with Teflon® pipe sealant, cut the flange adapter to the desired length, and solvent weld the flange adapter to the male adapter in the desired position with the proper solvent cement.

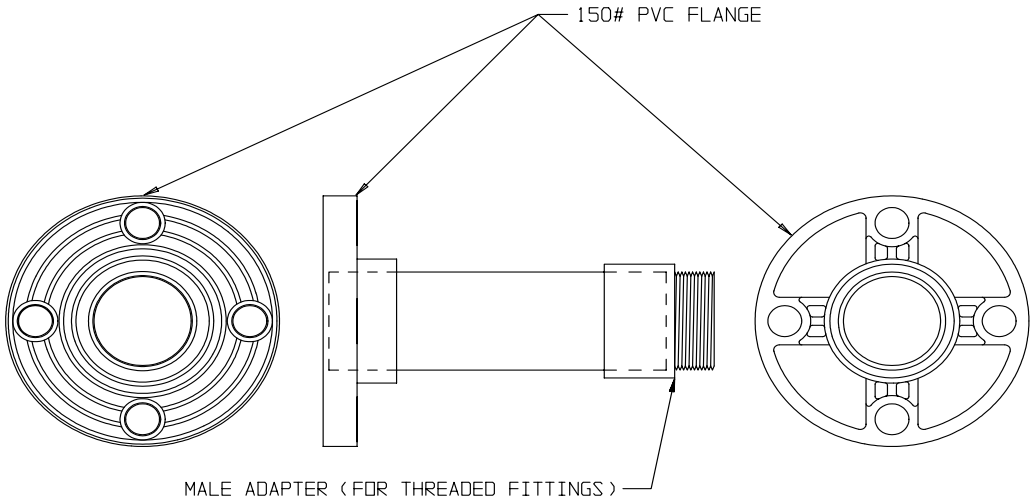

Figure 7.10

7.11 Flexmaster Expansion Joints

7.11.1 Service Conditions:

.2. The expansion joints are intended for use in low pressure (< 20 PSIG) piping applications or for use as the inlet of a flooded suction feed connection. The maximum use temperature of the expansion joints is 130°F for HDLPE materials and 140°F for XLPE materials.

.3. The application must be properly defined for the expansion joint. Application design movement must not exceed the design movement of the expansion joint. Please refer to the chart attached for design movement capabilities and spring rates. Also refer to the piping examples for proper installation examples. If the application exceeds the design capabilities of the expansion joint, please contact the manufacturer.

7.11.2 Alignment:

.1. Expansion joints are not designed to make up for piping misalignment error. Pipe misalignment should be no more than ¼” in any direction.

7.11.3 Pipe Support:

.1. Piping must be supported in all directions so expansion joints to not carry any piping weight.

7.11.4 Installation:

.1. Unbolt and remove split flanges from the faces of the expansion joint. Check to make sure the flange faces are clean and free of foreign materials. Flange faces should be free of any scratches or nicks. If scratches or nicks occur, sand the surface smooth with 220 grit sand paper using a random orbital sander.

.2. Locate the expansion joint between two 150# flanges spaced for the prescribed neutral length + ½” (the thickness of two full face 150# flange gaskets). Install bolts as shown in the drawing below. To obtain proper gasket compression, tighten all the fitting nuts hand tight using an opposing bolt tightening sequence until the gaskets engage the flanges and the lock washers are compressed. Tighten

each nut an additional 5/8 turn – 1-3/8 turns using the same sequence (do not tighten more than 1/2 turn at a time). A light application of lubricating oil is necessary to prevent thread seizing on S.S. bolts. Gasket compression should be between 25 - 50%. Tighten bolts to achieve gasket compression. Recheck fitting tightness periodically.

Flexmaster Expansion Joints										
Nominal size I.D.	Neutral Length (in.)	± Axial Movement	± Lateral Movement	Angular Deflection	Axial Spring Rate lbs./in.	Lateral Spring Rate lbs./in.	# Holes	Bolt Pattern	Bolt Size	Weight (lbs.)
2	20.71	4	2	5	N/A	N/A	4	150#	5/8"	8.44
3	31.5	4	2	5	27.3	6.6	4	150#	5/8"	13.86

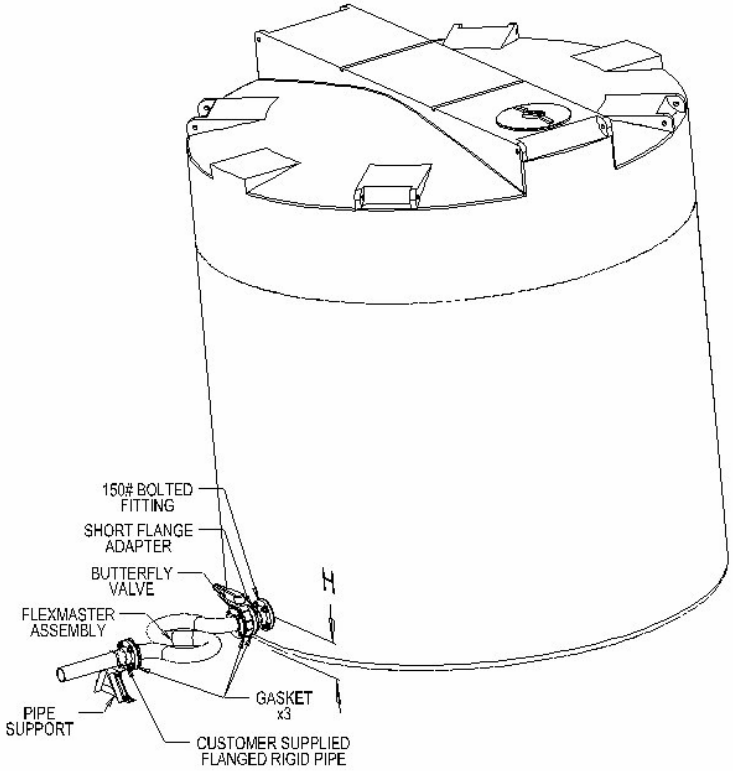

Figure 7.11

With the Flexmaster expansion joint installed horizontally as shown in the example above, dimension “H” can be up to 50” maximum and still meet the SII recommendation of 4% dimensional movement design. If the height of the fitting is above 50”, install the Flexmaster in a vertical configuration as shown in Figure 7.13.

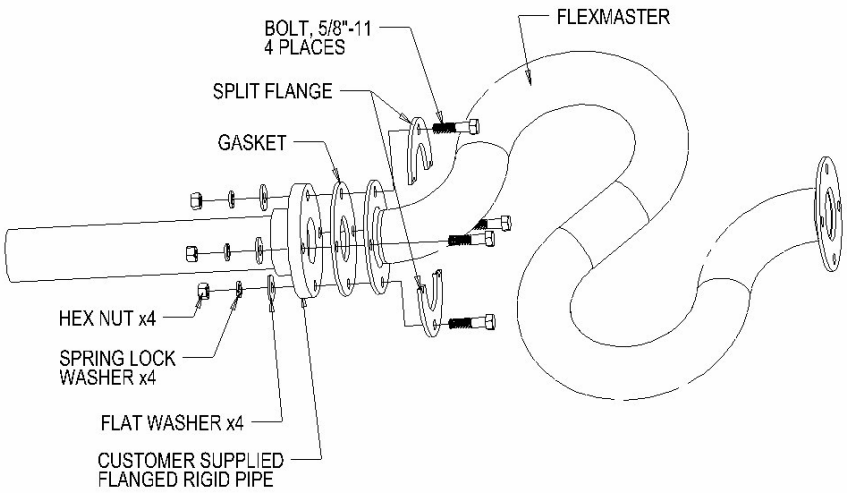

Figure 7.12 – Exploded Assembly

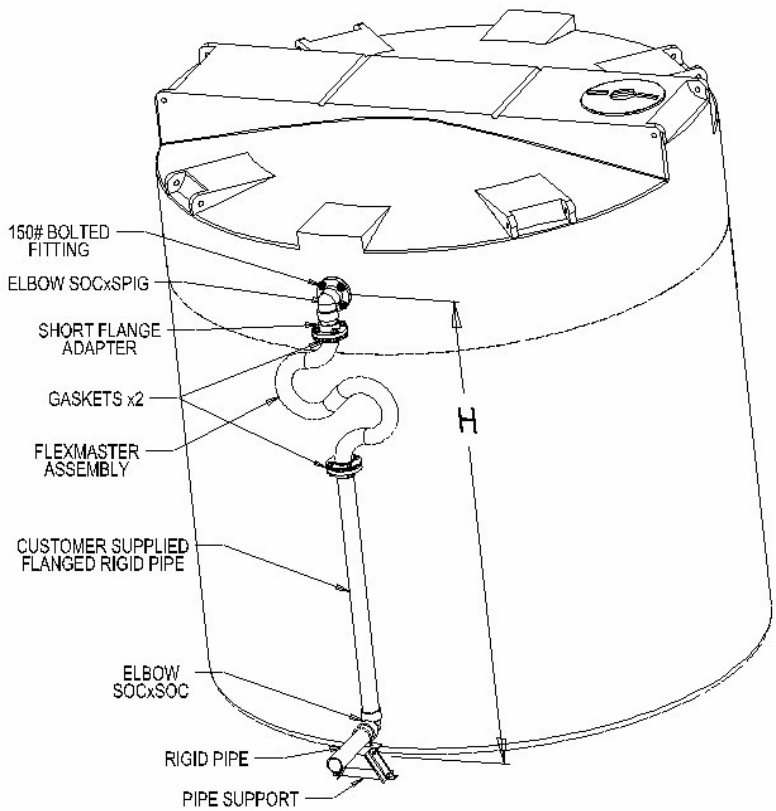

Figure 7.13

With the Flexmaster expansion joint installed vertically as shown in the example above, dimension “H” can be up to 100” maximum and still meet the SII recommendation of 4% dimensional movement design. If the

height of the fitting is above 100”, an additional Flexmaster can be installed in the vertical configuration to provide additional movement capability.

8. TANK ACCESSORIES

8.1 LATERAL RESTRAINT SYSTEM (FLAT BOTTOM TANKS)

8.1.1 The lateral restraint system is designed for tank position restraint on a concrete pad inside of an enclosed building. **It is not designed for wind or seismic restraint capabilities.** Using the assembly drawing and table shown in Figure 8.1, verify that all parts are present.

8.1.2 Locate the tank on the concrete pad as desired. The pad required for the restraint system must be 18-3/4” larger in diameter than the tank diameter for proper application of 1/2” adhesive anchor bolts (assumes 6-3/8” edge distance required). Lay out the bands around the tank (alternate long bands and short bands if both lengths are provided) with the studs and angle ends sticking out away from the tank. Fasten the bands together with the 3/8" - 16 x 4" hex head bolts as shown in the drawing. Raise the bands 17" and loosely install the anchor clips using the 1/2" - 13 hex nuts and 1/2" washers provided. Tighten the 3/8" - 16 x 4" hex head bolts to remove band looseness. Mark the slot locations of the anchor clips, remove the clips, and install the required number of 1/2" anchor bolts. Anchor bolts are not provided by the manufacturer and must be purchased by the customer.

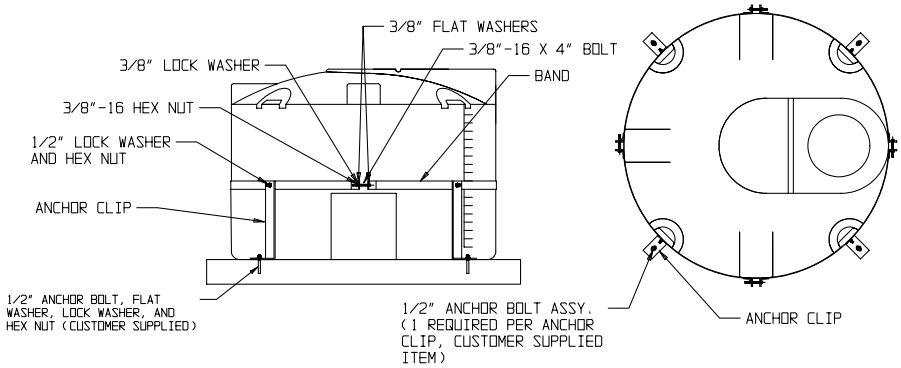

	QUANTITY REQUIRED					
TANK DIA. (IN.)	BAND 44 IN.	BAND 48 IN.	ANCHOR CLIPS	3/8"-16 X 4" BOLTS AND HEX NUTS	3/8" FLAT WASHERS	1/2" HEX NUTS AND FLAT WASHERS
48	0	3	3	3	6	3
64	0	4	4	4	8	4
86	5	0	5	5	10	5
90	3	3	6	6	12	6
102	7	0	7	7	14	7
120	4	4	8	8	16	8
137	4	5	9	9	18	9
142	0	9	9	9	18	9

Figure 8.1

8.1.3 Replace the anchor clips and secure the clips to both bands and the concrete pad. Do not over tighten the bands to the tank. The band tension should only remove looseness and not cause any tank deflection.

8.2 WIND/SEISMIC TANK RESTRAINT SYSTEM (FLAT BOTTOM TANKS)

8.2.1 The wind/seismic tank restraint system is designed for tank restraint on an appropriate concrete pad under 110 MPH wind or seismic zone 4 conditions. Using the assembly drawing and table sent with the assembly, verify that all parts are present. Please see Figure 8.2 for a restraint system installation and assembly information.

8.2.2 Locate the tank on the concrete pad as desired. Lay out all anchors required (4 or 8) equally spaced, (4 anchors must be directly below the tank tie down locations). Make sure all anchors are located next to the tank with the front face of the anchor weldment located next to the tank. Mark all the anchor bolt locations, remove the anchors and install the required Hilti adhesive model HVA anchor bolts as specified in the assem-

bly drawing and table sent with the assembly. These anchor bolts are not provided by the manufacturer and must be purchased by the customer. Customer must follow all Hilti anchor bolt installation instructions.

8.2.3 Replace the anchors and secure the anchors to the concrete. Fasten the tank to the concrete pad with the required cable (make sure the cable sheath is on the cable and located around the lug locations) as shown by the assembly drawing utilizing the cable thimbles and clamps provided. Tension the cable before filling the tank to remove cable looseness. Do not over-tension the cables as this may cause tank damage. The cable tension will change with tank loading and temperature changes - DO NOT re-tension the cables.

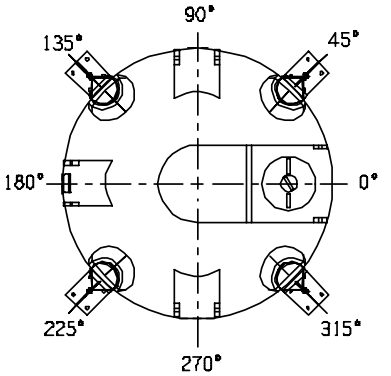

TABLE 1				
CLIP SIZE [INCHES]	ROPE SIZE [INCHES]	MINIMUM # CLIPS REQ.	AMOUNT OF ROPE TURN-BACK [INCHES]	*TORQUE IN Ft. Lbs
1/4	1/4	2	4-3/4	15
3/8	3/8	2	6-1/2	45
1/2	1/2	3	11-1/2	65
5/8	5/8	3	12	95
* THE TIGHTENING TORQUE VALUES SHOWN ARE BASED UPON THE THREADS BEING CLEAN, DRY, AND FREE OF LUBRICATION.]				

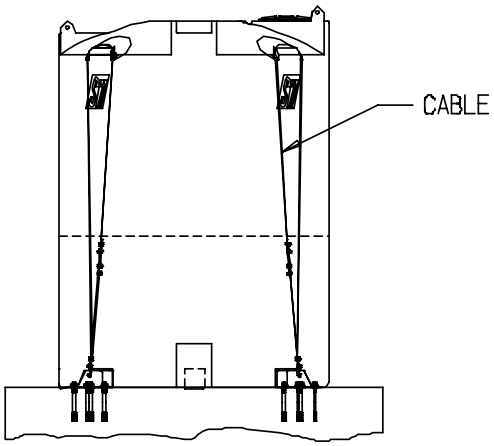

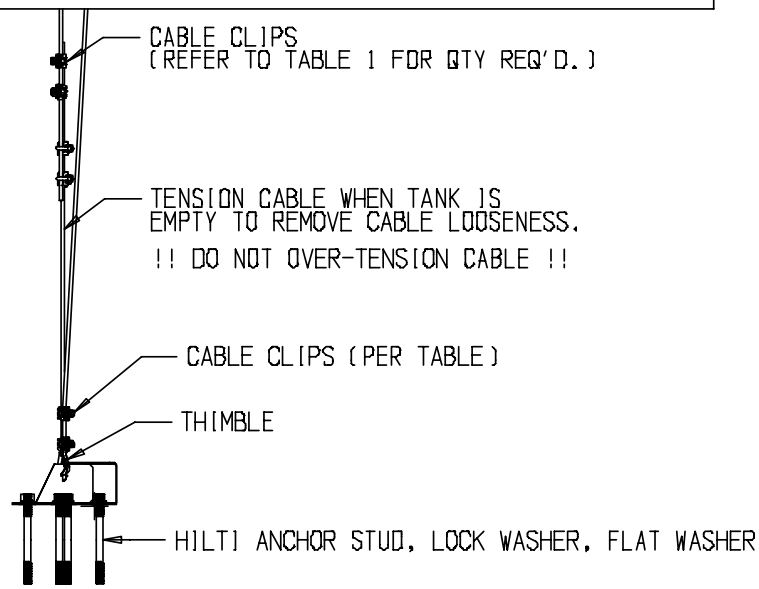

Figure 8.2

8.3 WIND/SEISMIC TANK RESTRAINT SYSTEM (CONE BOTTOM TANKS)

8.3.1 The wind/seismic tank restraint system is designed for cone bottom tank restraint on an appropriate concrete pad under 110 MPH wind or seismic zone 4 conditions using a SII cone stand for proper tank support. Using the assembly drawing and table shown in Figure 8.3, verify that all parts are present.

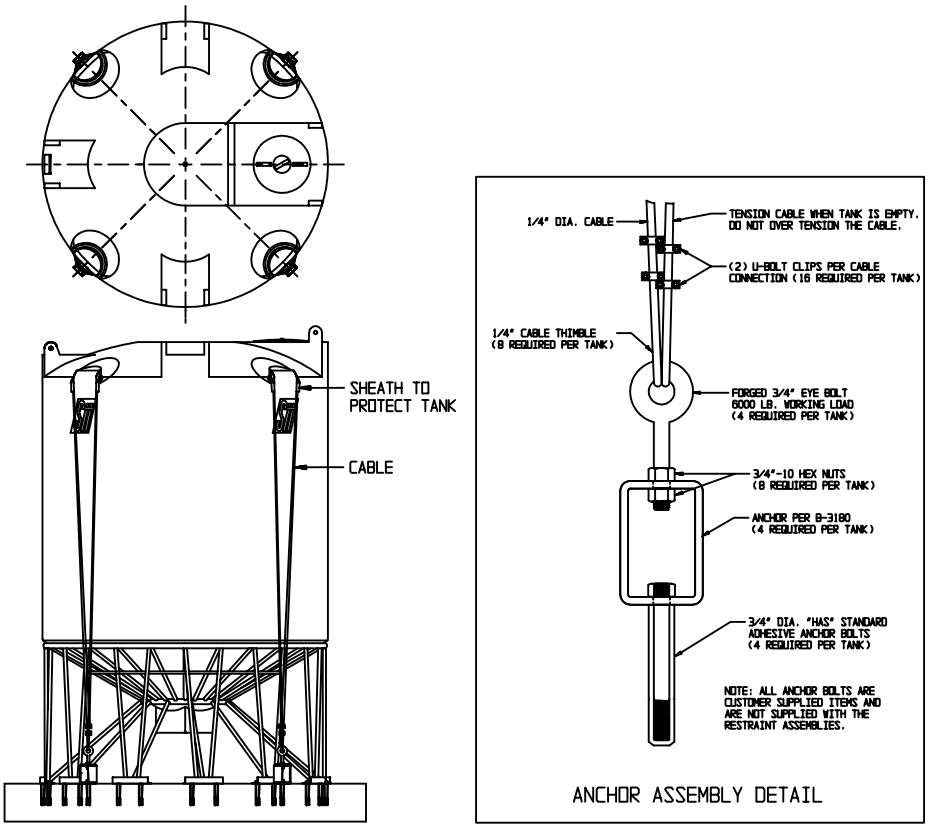

TANK SIZE (GALLONS)	TANK DIAMETER (INCHES)	1.9 SPECIFIC GRAVITY FLUID STAND REQUIRED	STAND ANCHOR BOLTS REQUIRED
500	64	78800	8 EA. 1/2" DIA. "HAS" STANDARD
500	86	79000	8 EA. 1/2" DIA. "HAS" STANDARD
1000	64	78800	8 EA. 1/2" DIA. "HAS" STANDARD
1400	86	79000	8 EA. 1/2" DIA. "HAS" STANDARD
1500	64	78800	8 EA. 1/2" DIA. "HAS" STANDARD
1650	86	78900*	8 EA. 1/2" DIA. "HAS" STANDARD
2000	90	79300	24 EA. 3/4" DIA. "HAS" STANDARD
2500	90	79300	24 EA. 3/4" DIA. "HAS" STANDARD
2600	90	79400	24 EA. 3/4" DIA. "HAS" STANDARD

*NOTE: 79000 STAND ACCEPTABLE FOR SPECIFIC GRAVITIES UNDER 1.7

TANK SIZE (GALLONS)	TANK DIAMETER (INCHES)	1.9 SPECIFIC GRAVITY FLUID STAND REQUIRED	STAND ANCHOR BOLTS REQUIRED
3000	90	79300	24 EA. 3/4" DIA. "HAS" STANDARD
3900	90	79300	24 EA. 3/4" DIA. "HAS" STANDARD
4100	90	79900	24 EA. 3/4" DIA. "HAS" STANDARD
4400	90	79800	24 EA. 3/4" DIA. "HAS" STANDARD
5500	90	79800	24 EA. 3/4" DIA. "HAS" STANDARD
5600	90	79900	24 EA. 3/4" DIA. "HAS" STANDARD
6000	142	79500	24 EA. 3/4" DIA. "HAS" STANDARD
6500	90	79800	24 EA. 3/4" DIA. "HAS" STANDARD
7400	142	79500	24 EA. 3/4" DIA. "HAS" STANDARD
11500	142	79500	24 EA. 3/4" DIA. "HAS" STANDARD

Figure 8.3

8.3.2 Locate the tank and stand on the concrete pad as desired. The pad required for the restraint system must be 24” larger in diameter than the tank diameter for proper application of 3/4” adhesive anchor bolts (assumes 10” edge distance required. Lay out the four anchors provided directly below the tank tie down locations. Make sure all anchors are located so the hole in the anchor aligns with the tank wall. Mark all the anchor bolt locations (stand and anchor positions), remove the stand and anchors and install the required Hilti adhesive model HVA anchor bolts as specified by the assembly drawing and the SII seismic restraint drawing B-3182. These anchor bolts are not provided by the manufacturer and must be purchased by the customer.

8.3.3 Replace the stand and anchors and secure to the concrete pad. Install the 3/4" eyebolts loosely as shown by the drawing. Fasten the tank to the concrete pad with the required cable (make sure the cable sheath is on the cable and located around the lug locations) as shown by the assembly drawing utilizing the cable thimbles and clamps provided. Tension the cable <u>before</u> filling the tank to remove cable looseness. Do not over-tension the cables as this may cause tank damage. The cable tension will change with tank loading and temperature changes - <u>DO NOT</u> re-tension the cables.

8.4 STEEL LADDERS

8.4.1 Steel ladders are designed in accordance with OSHA 1910.27 and are to be mounted next to the tank on a concrete pad at the same elevation as the bottom of the tank. The concrete pad area that the ladder mounts to must be of sufficient size as to comply with OSHA standards regarding proper access to and from the ladder. This should be determined by the construction site engineer based on the specific application. The pad must be of sufficient size to allow proper attachment of 1/4” anchor bolts (check with anchor bolt manufacturer for embedment and edge distance required). The ladder mounting system is designed to allow for tank expansion and contraction due to temperature and loading changes. Using the assembly drawing and table shown in Figure 8.4, verify that all parts are present and assemble accordingly.

NOTE: This ladder is provided for tank inspection only. At no time should the operator step off this ladder onto the tank unless stepping onto an approved work platform with guard rails or utilizing some other approved safety device. Proper safety equipment (i.e. guard rails, safety harness, etc.) must be used to step onto the tank. Consult applicable regulations to determine proper equipment for other than inspection work.

8.4.2 Attach the two pivoting attachment arms to the ladder using 1 ea. 1/2"-13 x 2" hex head bolt and 2 ea. 1/2" - 13 hex nuts. Double nut each bolt by tightening the first nut to 85 ft. - lbs. of torque and then jamming the second nut to the first nut by holding the first nut and tightening the second to 85 ft. - lbs. of torque. Position the ladder on the tank and attach the top pivoting attachment arms to the tank with the ladder attachment tube and cotter pin provided (see Figure 8.4). Position the ladder parallel with the side of the tank and mark the 1/4" anchor bolt locations. Install appropriate 1/4" anchor bolts and attach the bottom of the ladder to the concrete pad. Anchor bolts are not provided by the manufacturer and must be purchased by the customer.

8.5 STEEL LADDER CAGES

8.5.1 Using the assembly drawing shown in Figure 8.5 and the instructions in section 8.5.2, verify that all parts are present and assemble accordingly. These cages are designed for use only with the SII steel ladder design. Cages are required for ladders used to ascend to heights exceeding 20 ft.

NOTE: Assembly is easier if the cages are installed on the ladder before the ladder installation to the tank.

8.5.2 Install the cages loosely using the u-bolts provided starting with the top cage unit (4 ft. unit with a larger bolt pattern). The bottom cage unit must have a larger diameter at the bottom than at the top of the unit and the bottom edge of the unit be located a minimum of 7 feet and a maximum of 8 feet above the ground. When the cage units have been properly located and spaced evenly, tighten the u-bolts securely.

8.6 FRP LADDERS (up to 300" height)

8.6.1 FRP ladders are designed in accordance with OSHA 1910.27 and are to be mounted next to the tank on a concrete pad at the same elevation as the bottom of the tank. The concrete pad area that the ladder mounts to must be of sufficient size as to comply with OSHA standards regarding proper access to and from the ladder. This should be determined by the construction site engineer based on the specific application. The pad must be of sufficient size to allow proper attachment of 5/8” anchor bolts (check with anchor bolt manufacture for embedment and edge distance required). The ladder mounting system is designed to allow for tank expansion and contraction due to temperature and loading changes. Using the assembly drawing and table shown in Figure 8.6, verify that all parts are present and assemble accordingly.

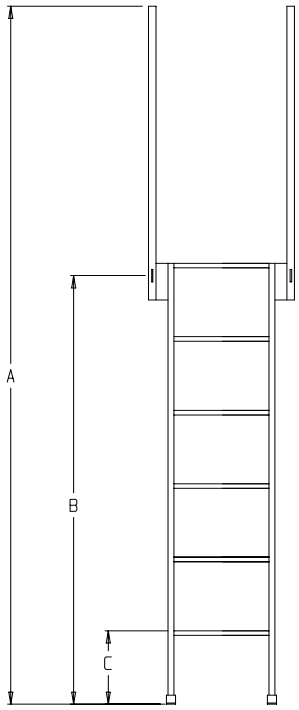

TANK SIZE	TANK P/N	A	B	C	CAGE
2000 X 90	505XXX	126.0	84.0	12	NO
2500 X 90	509XXX	145.0	103.0	7	NO
3000 X 90	513XXX	162.0	122.0	9	NO
3000 X 102	741XXX	135.0	93.0	12	NO
3900 X 90	519XXX	198.0	158.0	12	NO
4400 X 90	521XXX	219.0	178.0	9	NO
4400 X 120	8200XX	138.0	96.0	12	NO
4500 X 102	742XXX	183.0	139.0	9	NO
4900 X 90	548XXX	239.0	197.0	5	NO
5500 X 90	702XXX	258.0	215.0	12	NO
5500 X 120	700XXX	159.0	119.0	9	NO
5600 X 142	525XXX	126.0	85.0	12	NO
6000 X 102	743XXX	227.0	183.0	5	NO
6200 X 120	8220XX	179.0	135.0	5	NO
6500 X 120	714XXX	181.0	140.0	7	NO
7000 X 142	530XXX	147.0	105.0	9	NO
7500 X 102	744XXX	270.0	228.0	12	NO
8500 X 120	740XXX	222.0	182.0	12	NO
8750 X 142	536XXX	169.0	129.0	7	NO
9500 X 120	745XXX	243.0	203.0	9	NO
10500 X 142	533XXX	193.0	152.0	7	NO
12500 X 142	535XXX	222.0	181.0	12	NO
15000 X 142	537XXX	258.0	217.0	12	NO
16500 X 142	538XXX	282.0	240.0	12	YES

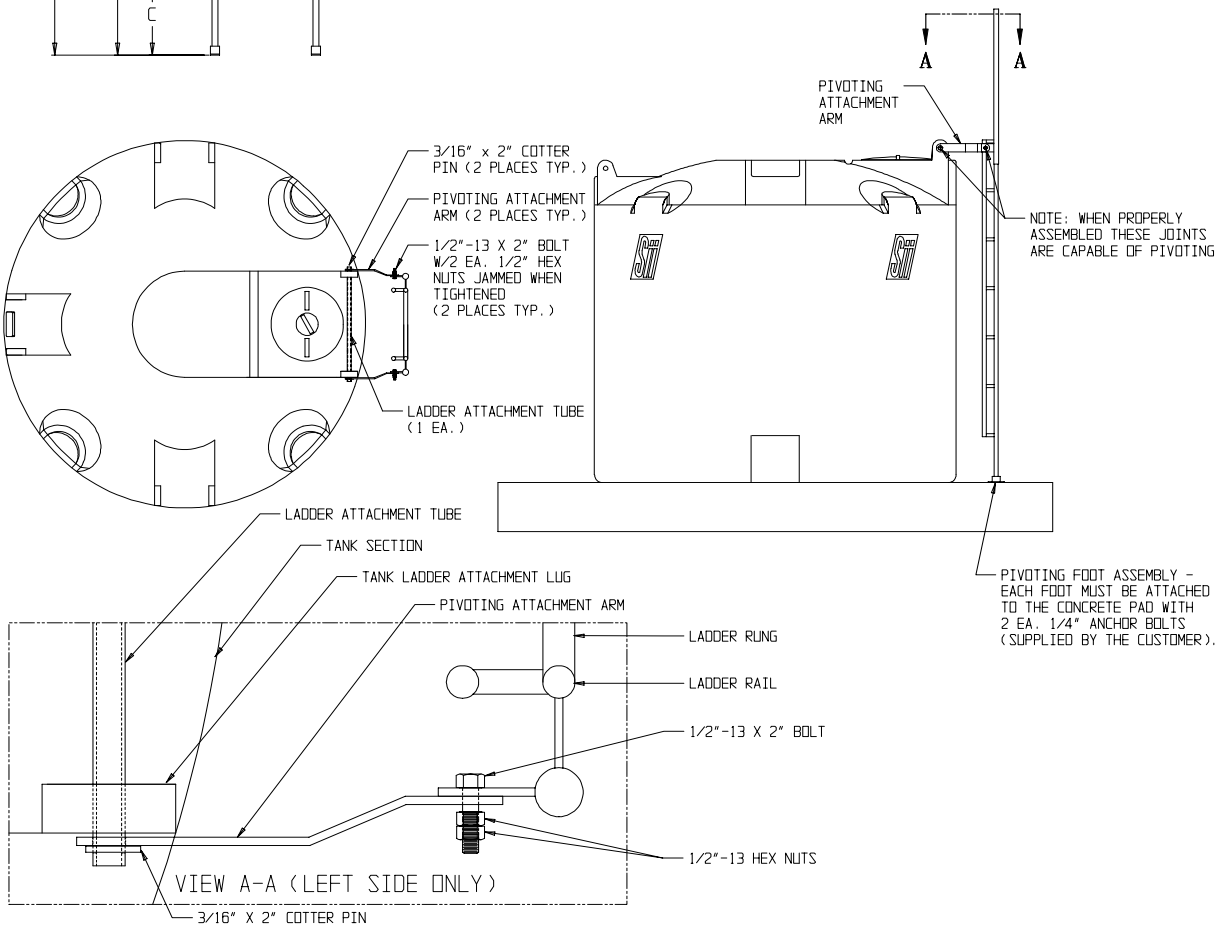

Figure 8.4

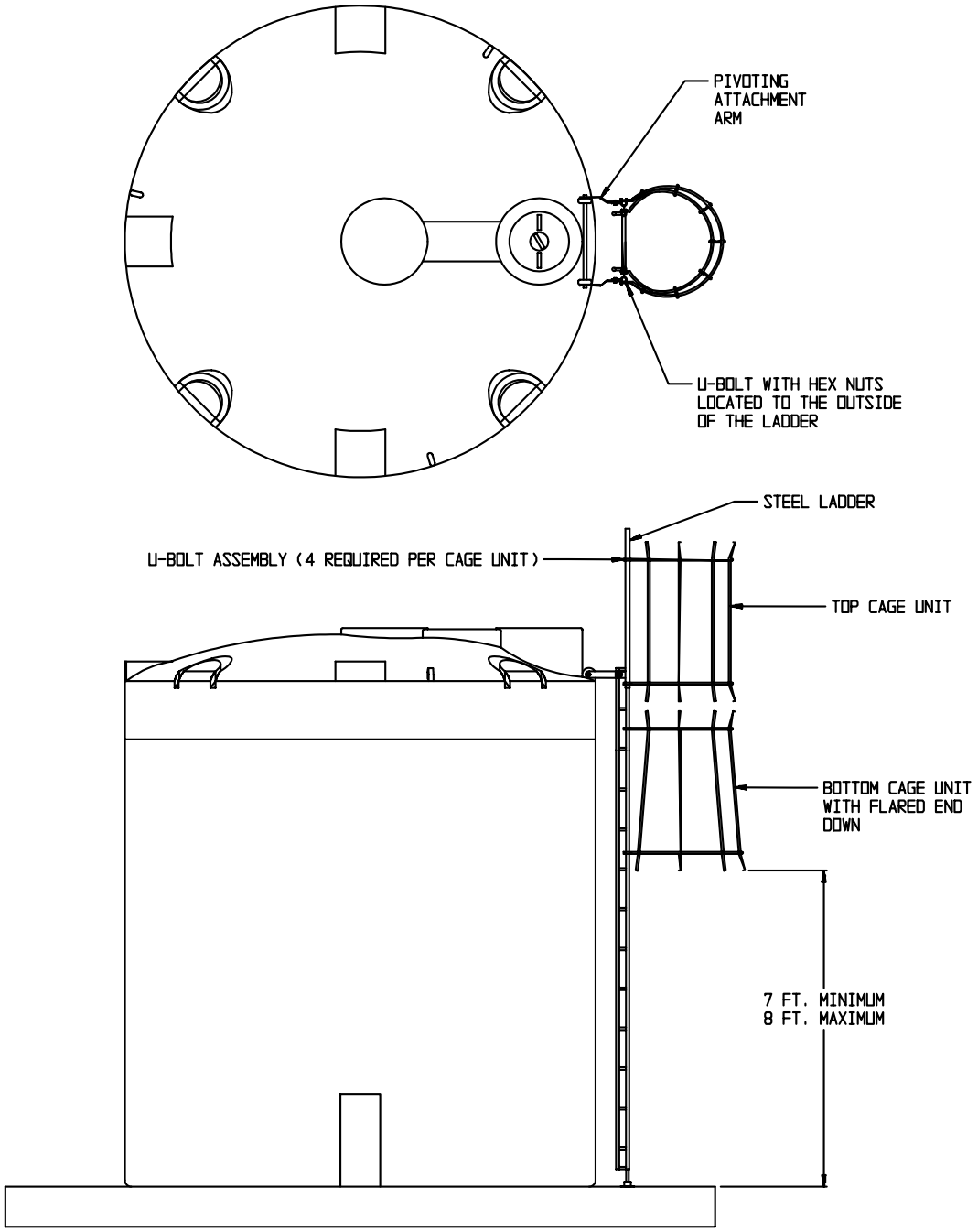

Figure 8.5

NOTE: This ladder is provided for tank inspection only. At no time should the operator step off this ladder onto the tank unless stepping onto an approved work platform with guard rails or utilizing some other approved safety device. Proper safety equipment (i.e. guard rails, safety harness, etc.) must be used to step onto the tank. Consult applicable regulations to determine proper safety equipment.

8.6.2 Attach the stainless steel top pivoting attachment arms to the ladder using the 1/2" bolt and 3/4" bushing assemblies (2 required) as shown in Figure 8.6. Position the ladder on the tank and attach the top pivoting attachment arms to the tank with the ladder attachment tube and cotter keys provided (see assembly drawing). Position the ladder parallel with the side of the tank and mark 4 ea. 5/8" anchor bolt locations. Install appropriate 5/8" anchor bolts and attach the bottom of the ladder to the concrete pad. Anchor bolts are not provided by the manufacturer and must be purchased by the customer.

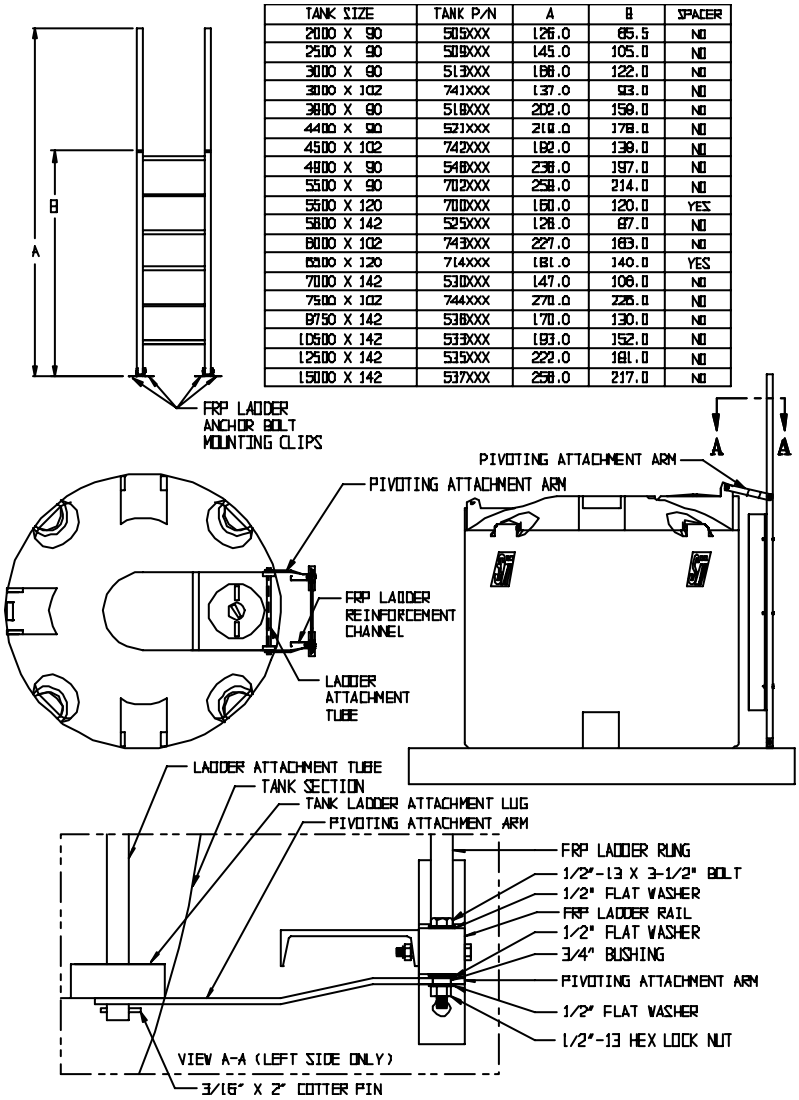

TANK SIZE	TANK P/N	A	B	SPACER
2000 X 90	505XXX	126.0	85.5	NO
2500 X 90	509XXX	145.0	105.0	NO
3000 X 90	513XXX	168.0	122.0	NO
3000 X 102	741XXX	137.0	93.0	NO
3800 X 90	518XXX	202.0	159.0	NO
4400 X 90	521XXX	210.0	178.0	NO
4500 X 102	742XXX	182.0	139.0	NO
4800 X 90	548XXX	238.0	197.0	NO
5500 X 90	702XXX	258.0	214.0	NO
5500 X 120	700XXX	160.0	120.0	YES
5800 X 142	525XXX	128.0	87.0	NO
6000 X 102	743XXX	227.0	183.0	NO
6300 X 120	714XXX	181.0	140.0	YES
7000 X 142	530XXX	147.0	108.0	NO
7500 X 102	744XXX	270.0	225.0	NO
8750 X 142	536XXX	170.0	130.0	NO
10500 X 142	533XXX	193.0	152.0	NO
12500 X 142	535XXX	222.0	181.0	NO
15000 X 142	537XXX	258.0	217.0	NO

Figure 8.6

8.7 FRP LADDER CAGES

8.7.1 Using the assembly drawing shown in Figure 8.7 and the instructions in section 8.7.2, verify that the correct number of fasteners have been shipped to attach the FRP cage unit. These cages are designed for use only with the SII FRP ladder design. Cages are required for ladders used to ascend to heights exceeding 20 ft.

NOTE: Assembly is easier if the cage unit is installed on the ladder before ladder installation.

8.7.2 Position the cage unit on the ladder with the flared end toward the ladder base. Attach the cage to the ladder using the 3/8" stainless steel bolts provided (4 bolt assemblies per cage hoop).

8.8 HORIZONTAL LEG TANK INSTALLATION

8.8.1 Horizontal leg tanks are to be used only with adequate support. Horizontal leg tank skids are available for SII horizontal leg tanks (750-1685 gallons) to provide adequate support and a structural support frame that provides easy attachment for a variety of stationary applications. The hoop pipe restraints restrain the leg tank and give it additional structural support. Hoop restraints are available for tanks 525 gallons and larger. Hoops are required on tank sizes above 730 gallons. The use of a SII skid is not required, but it is important to have proper support under all of the tank support areas (points which would contact the ground if

the tank was sitting on level ground) and a method to attach and tighten the hoop pipe restraint system. An example assembly drawing is shown in Figure 8.8.

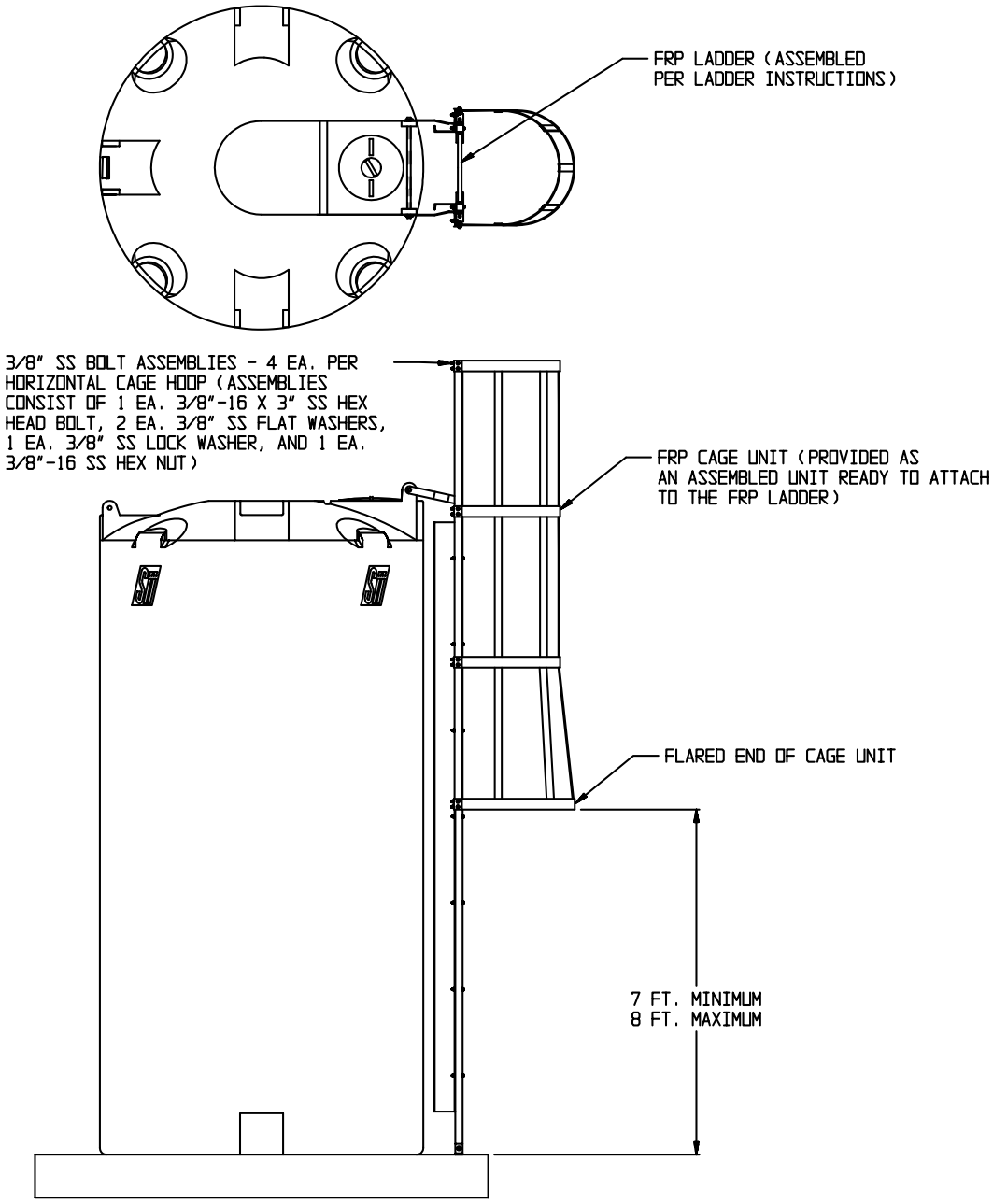

Figure 8.7

8.8.2 In the example shown, position the skid provided in the desired location and attach as necessary for the application. Position the tank on the skid with the legs centered over the hoop mounting holes in the top of the skid.

8.8.3 With one person on each side of the tank, insert J-bolts into the hoop holes and lift the hoop into position directly above the tank legs. Spread the hoop slightly while sliding the hoop (centered in the pipe guide channel formed into the tank legs) onto the tank. Insert the J-bolts into the proper holes in the top of the skid. Install the bevel washer, lock washer, and hex nut on each of the J-bolts loosely. Do not tighten the hex nuts yet. See view A-A shown in Figure 8.8 for an illustration of the loosely assembled J-bolt/hoop assembly.

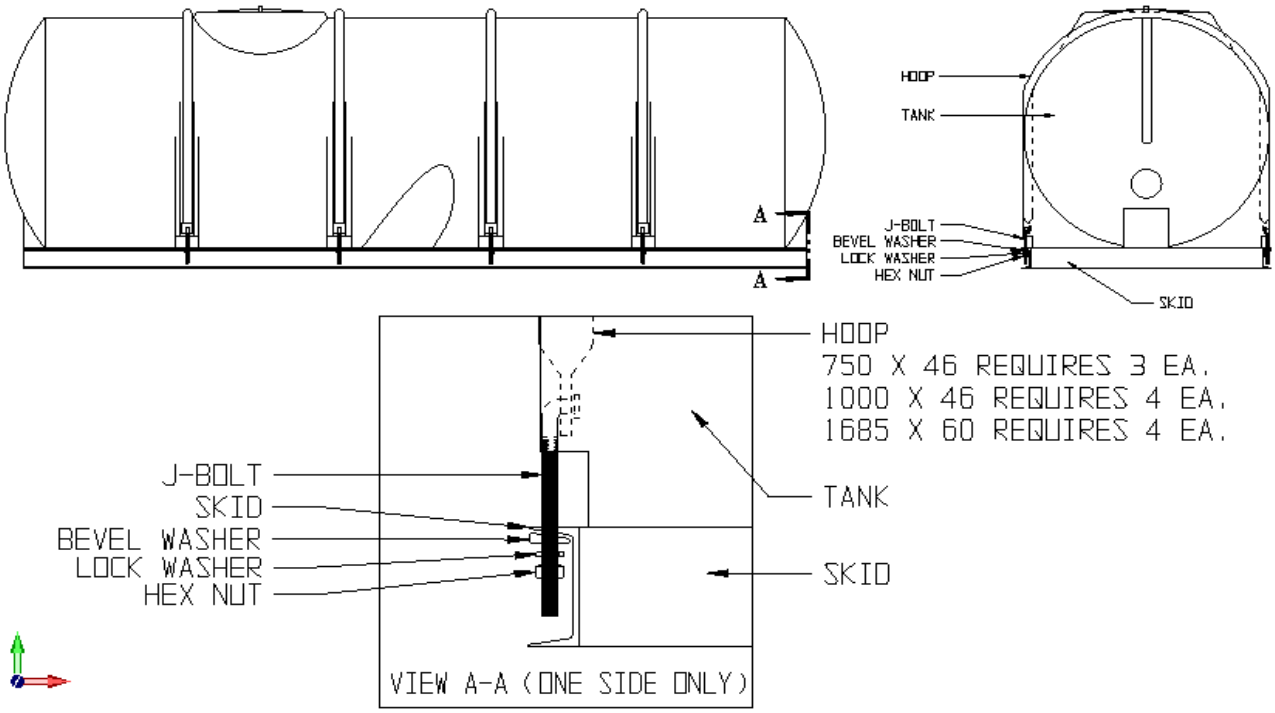

Figure 8.8

8.8.4 Repeat the procedure as detailed in section 8.8.3 for each of the remaining hoops required. When all hoops have been loosely installed, check the tank and hoop alignment to make sure the placement is correct. When proper alignment has been established, start tightening the hex nuts on each hoop. Tighten both sides of the hoop equally until the top of the hoop is tight all the way around the top of the tank and proper tension is obtained. Proceed to the next hoop and repeat the tightening procedure until all of the hoops have proper tension. Recheck the hoop tension after the tank has been filled. Tighten the hoops as necessary until the top of the hoop is tight all the way around the top of the tank.

8.9 CONE BOTTOM TANK STAND EXTENSIONS

8.9.1 Cone bottom tank stand extensions are designed specifically for use with SII cone bottom tank stands. Cone bottom tank stands equipped with extensions are not approved for seismic restraint applications. The extensions are provided in 20" and 40" welded units and are used to increase cone bottom tank clearance 20" or 40".

8.9.2 Install the extensions onto the cone stand legs with the bolt assemblies provided. Tighten bolts to 300 ft.-lbs of torque. With the extensions in place, proceed with the cone stand installation as previously described.

8.10 HEATED TANKS

8.10.1 Heated tanks are insulated with a minimum of 2" of 2-3 lb./ft.^{3} polyurethane foam material with an "R" valve of 8.33/in. The insulation is sealed with 2 coats of acrylic latex mastic. Although this appears to be a tough, resilient covering, it can be easily torn or broken if the tank is not properly transported. **Use only carpeted and padded equipment to move an insulated tank.** Do not allow the tank to drop or roll on rough surface as this may damage the insulation.

8.10.2 Heated tanks are equipped with at least 1 control box with maintenance temperature and over-limit temperature settings. The maintenance temperature setting should be set at the desired maintenance temperature. The over-limit temperature setting should be adjusted to 10 degrees above the desired maintenance temperature. The maximum temperature the over- limit control should be set to is 140° F for

crosslinked polyethylene tanks and 130° F for high density linear polyethylene tanks. Be sure to check tank material type and design before setting any control temperatures over 100° F. It is best to keep the tank at the lowest temperature necessary to accomplish the desired objective. The Figure 8.11 on the next page shows a standard 110 VAC control box front cover with the control functions shown. This control box has calibration functions for the temperature probes. The control box is factory calibrated and should not need re-calibrated. If there are any questions about control box calibration, consult the factory. Figure 8.12 shows a schematic of the terminal connections possible located under the control box front cover. The terminals available for customer connection are: line in, over-limit alarm relay, and low-limit alarm relay. There are other control boxes available with different functions not detailed in these instructions. Please consult the factory with questions regarding other types of control boxes available. Do not expose control box to atmosphere during or after installation for extended periods of time as this could cause condensation. Refer to the control box instructions and schematics sent with each tank for further details.

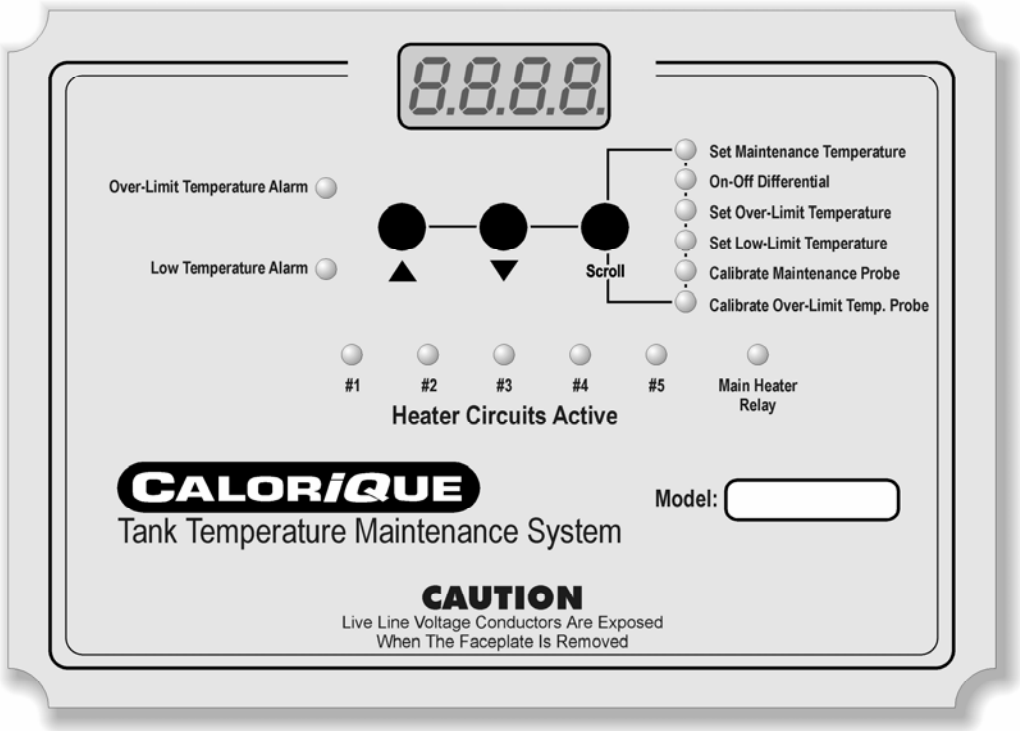

Figure 8.11

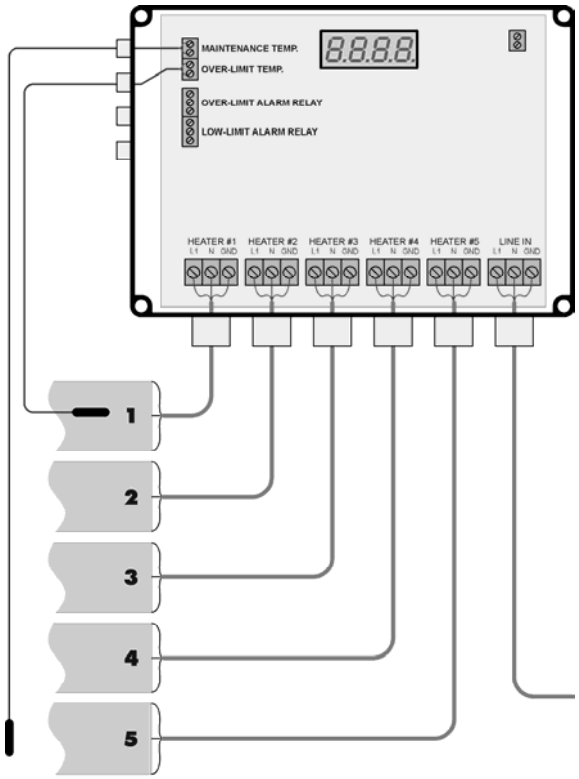

Figure 8.12

9. TANK MAINTENANCE

9.1 TANK INSPECTION

9.1.1 Simple periodic inspections of the tank installation can prevent problems and chemical loss from occurring. Inspection intervals should be consistent with site usage (the more times liquid is processed through the tank site, the more frequent the inspections). The checking procedure should be as follows:

1. Inspect the tank for physical damage such as cuts, impacts, cracks, swelling, softening of tank walls, and stress cracks (caused by long term exposure to environmental conditions and stress). NOTE: A tank inspection guide is available on the SII website at the following address: www.snydernet.com or can be obtained for tank inspections and analysis through the Customer Service Department at SII.

2. Inspect the fittings for broken parts, cracks, wear marks, or other signs of potential leaks.

3. Inspect gaskets for deterioration. Look for discoloration, bulges, checking or crazing. All of these symptoms could indicate potential failure.

4. Inspect any valves and/or pumps that may be connected to the tank. Also inspect the hoses and connections for any signs of wear.

10. SII PRODUCT POLICY STATEMENTS

10.1 SII STANDARD LIMITED WARRANTY

10.1.1 Distributors and their authorized distribution have the responsibility of calling to the attention of their customers the following Snyder Industries, Inc. standard limited warranty, prior to acceptance of an order from the customer for any Snyder Industries, Inc. product. Record all required warranty information in section 2.1 and retain this information for use in the advent of a warranty question.

10.1.2 Snyder Industries, Inc. warrants to the purchaser for use that if any manufactured tank product is proven to be defective in material or workmanship within 3 YEARS from the date of original invoice from factory, and Snyder Industries, Inc. is notified within 15 days after such defect is discovered, Snyder Industries, Inc. will (at company option) either replace or repair said part. Snyder Industries, Inc. warrants to the purchaser for use that if any tank fitting, attachment, or accessory product is proven to be defective in material or workmanship within 1 YEAR from the date of original invoice from factory, and Snyder Industries, Inc. is notified within 15 days after such defect is discovered, Snyder Industries, Inc. will (at company option) either replace or repair said part. This Snyder Industries Standard Limited Warranty does not apply to damage resulting from misuse, improper application of recommended materials, neglect, material wear, accident, or improper installation or maintenance. Said part will not be considered defective if it substantially fulfills performance specifications. THE FOREGOING STANDARD LIMITED WARRANTY IS EXCLUSIVE AND IN LIEU OF ALL OTHER WARRANTIES OF MERCHANTABILITY, FITNESS FOR PURPOSE AND OF ANY OTHER TYPE, WHETHER EXPRESSED OR IMPLIED. Snyder Industries, Inc. neither assumes nor authorizes anyone to assume for it any other obligation or liability in connection with said tank product and will not be liable for incidental or consequential damages. THE REMEDIES STATED HEREIN SHALL BE THE EXCLUSIVE REMEDIES AVAILABLE UNDER THIS STANDARD WARRANTY. CLAIMS UNDER THIS STANDARD LIMITED WARRANTY SHALL BE HANDLED UNDER THE SNYDER INDUSTRIES, INC. SERVICE POLICY. Snyder Industries, Inc. will not be responsible for any charges incurred in repairing or servicing any Snyder Industries, Inc. product except as such repairs are made at Snyder Industries, Inc. or by Snyder Industries, Inc. personnel or as approved in writing from Snyder Industries, Inc. Customer Service.

10.2 SII WARRANTY EXCEPTIONS

10.2.1 Distributors and their authorized distribution have the responsibility of calling to the attention of their customers any exceptions to the Snyder Industries, Inc. standard limited warranty, prior to acceptance of an order from the customer for any Snyder Industries, Inc. product.

10.2.2 Due to the uniqueness of tank applications, Snyder Industries, Inc. may offer warranties other than the standard warranty. These warranty statements will be in writing from Snyder Industries, Inc. The warranty period may be longer than 3 years as in the case for purchased extended warranties, or the warranty period may be shorter than 3 years as in the case for certain chemical/material applications. Please consult Snyder Industries, Inc. if you have any questions regarding warranty coverage and/or requirements.

10.3 RETURN MERCHANDISE/WARRANTY CLAIM PROCEDURE

10.3.1 SII has specific procedures for return merchandise and warranty claims. To make a claim, please contact the Customer Service Department at SII by mail, phone or e-mail:

Snyder Industries, Inc.
P.O. BOX 4583
Lincoln, NE 68504
(402) 467-5221
FAX: (402) 467-6493
E-mail: sales@snydernet.com

The following information will be required to assist in filing your claim:

1. Product identification (tank size, part number, serial number, etc.)
2. SII customer order number
3. Name and phone number of person making the claim
4. Distributor/company name, address, and phone number
5. Description of reason for claim
6. Pictures of failure and installation
7. MSDS of chemicals stored
8. Temperature of tank application